ALTRAD Mostostal

Formwork systems

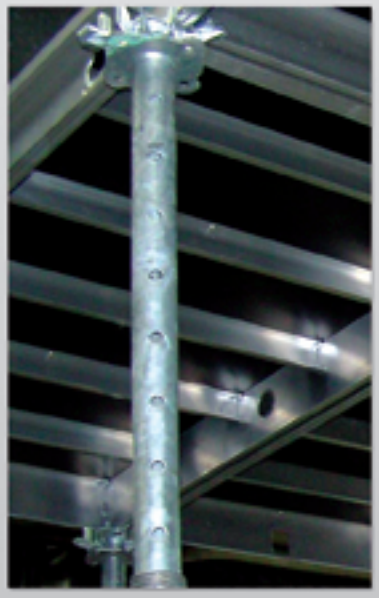

CATALOGUE 2009

06/2009

Building constructed with ALTRAD-Mostostal technology

The strength of ALTRAD-Mostostal lies in over 10 years of experience on Polish and European market (e.g.: Germany, France, Norway, Italy, Russia, Ukraine, Croatia, Denmark). The company is based on reliable foundations of the international, French based ALTRAD Group.

Over the years we have been improving our production and technological cycle in order to meet your expectations. Our products are renowned for the most reliant anti-corrosion protection – hot-dip zinc coating. With proper hardware maintenance, it allows you to use the formwork set for many years.


SUPPORTING TOWER


ALUSTROP


LIFT SHAFT

Our goal is to surprise you with new products and innovations, such as:

- light and durable ALUSTROP, which acts in the same way as standard ceiling, but at the same time is more economical in use;
- the design of the **SUPPORTING TOWER**, which is used to build supporting structures for working platforms, gang-boards and load-bearing constructions;
- **ECO PLATFORMS** easy to assemble, light structure that maintains resistant properties of a traditional, steel plank;
- **LIFT SHAFT** with formwork removing element which, once set-up, can be used on all subsequent levels of the building.

Our product's design and manufacturing process is in accordance with ISO 9001:2000 Quality Management System standards. Representative for Quality Assessment, called by the Management Board, is responsible for keeping proper procedures and regulations of ISO 9001:2000 standard throughout design and production phases as well as during the final delivery of the product.

Since many years the company has been a member of **Polish Chamber of Commerce – Scaffoldings** – a sector institution and an economical self-government organization that represents (especially towards government authorities) economical interests of associated business entities that produce, sell, and assemble scaffoldings .

Current catalogue features a broad range of formworks offered by our company.

In November 2008, ALTRAD-Mostostal received a distinction in II edition of ORŁY POLSKIEGO BUDOWNICTWA (Eagles of Polish Building Industry) contest in the category: Building Machines and Equipment/Devices. The contest has been organized by Związek Pracodawców Warszawy i Mazowsza (Employers Association of Warsaw and Mazovia) and Europa 2000 Consulting Sp. z o.o.

This award is a proof that ALTRAD-Mostostal is a company whose modern products, services, technologies, processes as well as methods of organization and management create up-to-date building industry that is safe and competitive, and that fully meets consumers' expectations.

The following certificates prove the high quality of our products and their conformity with safety regulations:
- Product safety certificates issued by Instytut Mechanizacji Budownictwa i Górnictwa Skalnego w Warszawie (Institute of Mechanised Construction and Rock Mining – Warsaw) for: facade scaffoldings, modular scaffoldings and mobile scaffoldings;
- SLV qualifications for steel and aluminium constructions workmanship on German market;

Full ALTRAD-Mostostal offer includes: **design, production and sale of scaffolding structures, formworks and other building accessories**. Our offer includes the following formworks: wall **MIDI BOX** and **MIDI BOX Plus**; ceiling: **ALUstrop** (light, aluminium ceiling), standard ceiling formwork system, and the following scaffoldings: frame, ROTAX modular, MP mobile; as well as the following structures: supporting towers, external staircases; formworks for pole forming; lift shaft formwork, etc.

We act: comprehensively, efficiently and fast. Starting from the design process, up to the delivery of a full formwork or scaffolding set to the building site.

Scaffoldings and formworks offered by ALTRAD-Mostostal is a high-end equipment at competitive prices.

The following Technical/Trade Advisors will answer your inquiries:

ALTRAD-Mostostal Spółka z o.o.; ul. Starzyńskiego 1, 08-110 Siedlce
tel.: 0 801 ALTRAD (0 801 2 5 8 7 2 3) , tel.: +48 25 644 82 93, fax: +48 25 644 62 62

or ALTRAD-Mostostal Trade Representatives:

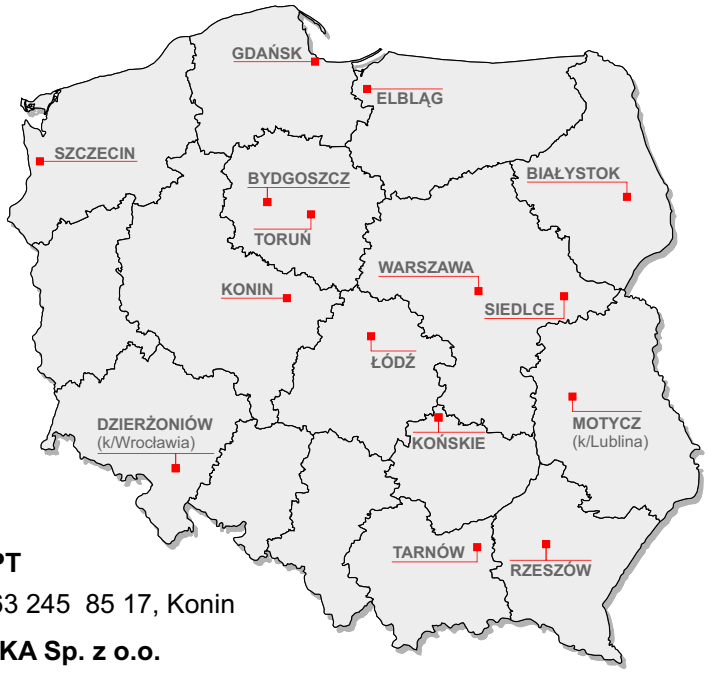

ADEPT
tel: 063 245 85 17, Konin

ATTYKA Sp. z o.o.
tel: 055 232 62 27, Elbląg

BPM Sp. z o.o.
tel: 085 745 47 68, Białystok

CAPITAL Sp. z o.o.
tel: 058 307 25 77, Gdańsk

CHRABĄSZCZ Rusztowania
tel: 056 654 85 62, Toruń

FASADEXTAR
tel: 014 627 35 68, Tarnów

INTERPETRO Sp. z o.o.
tel: 017 862 18 17, Rzeszów

ORENO
tel: 052 379 80 55, Bydgoszcz

OSTAP Sp. z o.o.
tel: 022 610 94 49, Warszawa

PRO-MEN Sp. z o.o.
tel: 081 503 00 52, Motycz (near Lublin)

SLABAK
tel: 042 689 83 69, Łódź

ALTRAD-Końskie Spółka z o.o.
tel: 041 375 12 48, Końskie

ALTRAD-Mostostal-Montaż Spółka z o.o.
tel: 025 631 03 50, Siedlce

ALTRAD-Pomorze Spółka z o.o.
tel: 091 469 37 26, Szczecin

ALTRAD-Prymat Spółka z o.o.
tel: 074 832 30 57, Dzierżoniów (near Wrocław)

Detailed information on:
http://altrad-mostostal.pl/en

We are looking forward to working with you!

ALTRAD-Mostostal offers a range of wall formwork systems, including:
- **MIDI BOX** system [60 kN];
- **MIDI BOX Plus** system [80 kN];
- pole forming system;
- lift shaft formwork;
- supporting trestles (formwork for one-sided formwork).


MIDI BOX boards – building site


MIDI BOX PLUS shuttering boards – building site


Pole forming

Full range of wall formwork system elements, **that are compatible, co-functioning, self-complementary and exchangeable**, allows designing perfect formwork for any wall. When full MIDI BOX set is in use, you can stay assured that any building project will be possible to undertake in self-sufficient, economical, proficient and quick manner.

Wall formwork is:
- spatial system, multiple assembly,
- system for **average** (MIDI BOX) and **heavy** (MIDI BOX Plus) loads — withstands concrete's pressure up to 80 kN/m2;
- high-end products (produced with high quality materials — hot-dip zinc coated steel; plywood planking made of multi-layered plywood, covered double-sided with fenofil foil);
- concrete surface smoothness that does not require plastering after formwork removal, but only needs thin plaster or filling.


MIDI BOX shuttering boards

MIDI BOX and MIDI BOX Plus systems used for realization of:
- combined footing,
- mid-sized and heavy walls,
- rectangular section poles,

- binders,
- lift shafts,
- and many other building elements.

All junction and additional elements which are in MIDI BOX system can be used with MIDI BOX Plus.

The use of both systems together allows efficient and optimal deployment of any chosen formwork. In order to move quickly entire MIDI BOX and MIDI BOX Plus sets, hoisting hooks can be used without the need of disassembling.

MIDI BOX wall formwork:

Mid-sized formwork that can be assembled at the building site without crane.

MIDI BOX formwork's permissible concrete's pressure:

- 60 kN/m2 – assembly without superstructures;
- 55 kN/m2 – assembly with superstructures;

MIDI BOX formwork is available with a full range of shuttering boards measuring from 25 cm up to 90 cm width, and the height of 150 cm, 270 cm and 300 cm.


Building site — MIDI BOX


MIDI BOX shuttering boards – exhibition


MIDI BOX formwork — building site in Sarajevo

MIDI BOX Plus wall formwork:

Heavy formwork — crane assembly, permissible concrete's pressure - 80 kN/m2.

Basic system elements are large size shuttering boards measuring from 90 cm up to 240 cm width, and the height of 270 cm and 300 cm.


Exemplary MIDI BOX system combinations


MIDI BOX corner setting


MIDI BOX Plus board
basic system element

Multipurpose boarding lock **BM260** and **BM710** reliably connects shuttering boards, clamps corners and poles with simultaneous function of surface straightening.
Additional stiffening in case of larger walls (both vertical and horizontal) is achieved with the use of boarding transoms and stiffening beams which can replace the **BM710** lock.

Walls as high as 270 cm or 300 cm are to be connected with three **BM260** locks for one board contact place. Shuttering boards in level raisers are to be connected with **BM710** locks. These locks have longer straightening foot (710 mm), which makes the formwork straightening surface larger.


Multipurpose boarding lock

Using **circular slats** it is possible to board many-sided constructions with a radius over 2.5 m. Having the possibility to choose three sizes of circular slats (15, 20 and 25 cm) and all the **MIDI BOX** and **MIDI BOX Plus boards**, it is also possible to precisely set up the formwork without the use of filling inserts. Circular slats are connected to boards with locks and centering bowstrings alternately.


Circular slats – design

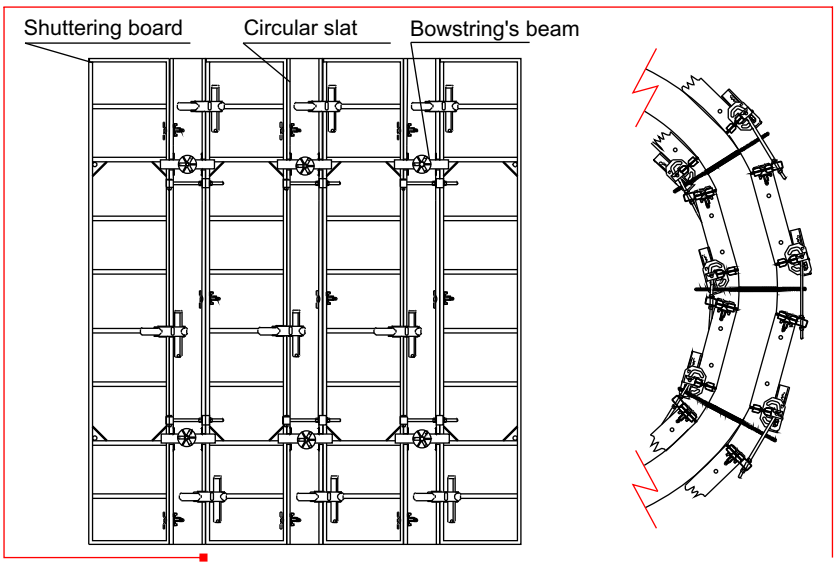

Circular slats – scheme

When there is a necessity to add a section to equal the length of walls, **filling inserts** can be used. It is a perfect solution when there is no possibility to acquire desired length of formwork with shuttering boards alone. In such case, wooden or steel inserts should be placed between boards.

ALTRAD-Mostostal offer includes typical 5cm wide, wooden and steel, inserts, as well as complementary filling inserts allowing compensating the length of the formwork within 7÷30 cm range. In case of wooden and steel inserts, board connection should be made with **BM260** and **BM710** locks, which allow the connection of 15 cm long inserts, and boarding transoms that stiffen the formwork and clasp the inserts.

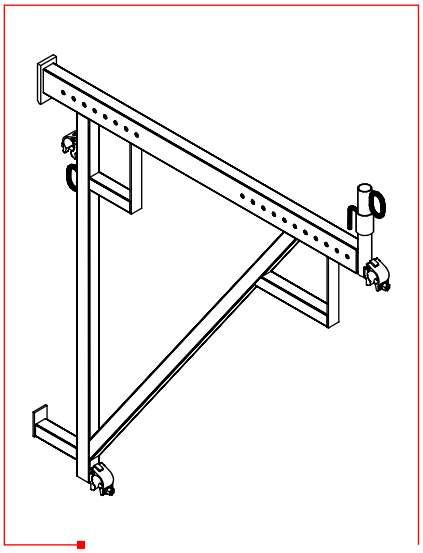

Climbing shuttering's bracket

Wall formwork element for exterior wall formwork is a **climbing shuttering's bracket**. Brackets are used up to the height of H=100 m. Maximum formwork height: 4.2 m — without additional anchoring of shuttering board. Maximum bracket spacing: 1.35 m. Bracket needs to be anchored with SKK cones, and waved or looped B15 anchors. Cone is a recoverable element.

MIDI BOX and MIDI BOX Plus **systems** are compatible. Diversity of the boards allows optimal set-up of any formwork. **Both systems assure concrete surface smoothness, that does not require plastering after formwork removal .** Thin plaster and filling may be applied.

Plywood disfigurement, due to concrete's pressure, hinders dense frame's ribbings with integrated holders that allows handy grip and elements transport. System's elements connect in a comfortable, fast and safe way, thanks to a large number of openings present throughout the steel structure.

Shuttering boards plumbing is performed with the use of:
- **tilt support** – used for shuttering boards plumbing up to the height of 3 m,
- **raking shore** – used for shuttering boards plumbing above the height of 3 m,

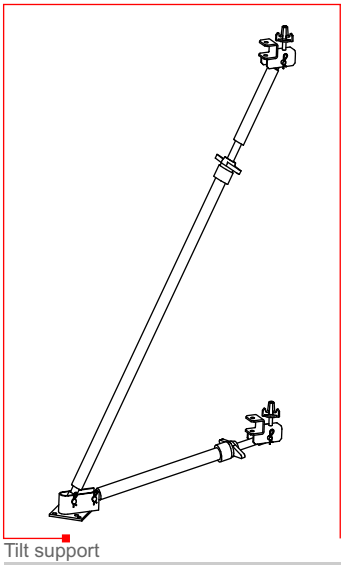

Tilt support

MIDI BOX and **MIDI BOX Plus** formwork sets, through the design, precision and protective measures, **provide personnel safety** during:

- **assembly,**
- **concrete filling,**
- **disassembly.**

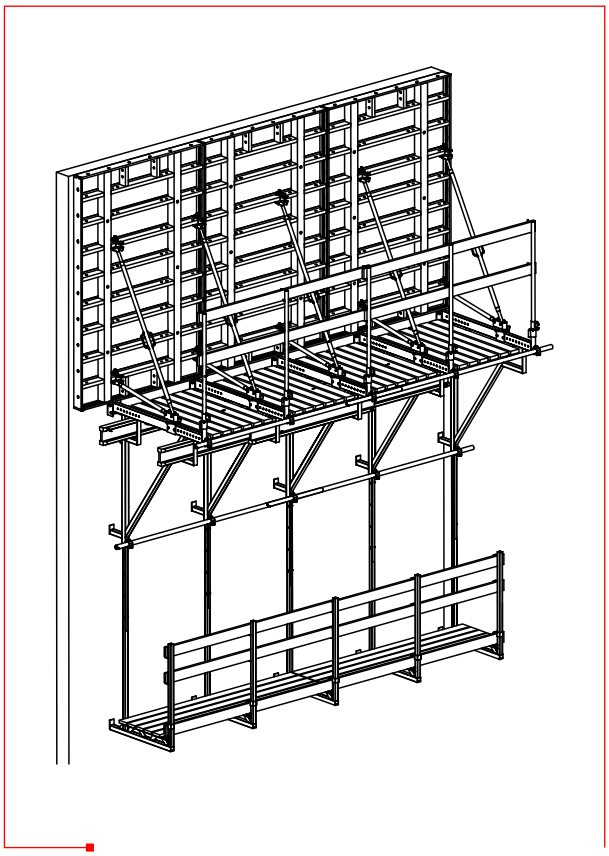

Climbing shuttering – scheme

MIDI BOX and **MIDI BOX Plus** systems allow the selection of boards with modules placed every 5 cm (vertically and horizontally). Shuttering boards can be interconnected in any desired configuration. Please remember that a standard board set-up is vertical. Horizontal set-up is to be treated as a supplement.

Lift shaft formwork is used for fast assembly and disassembly of internal formwork in lift shafts, without the need of separate disassembly of each element. It is possible with a formwork removing element that reduces the size of internal formwork segments by 5 cm. This allows free removal of the set from the lift shaft.

Formwork removing element is a system element of **MIDI BOX** and **MIDI BOX Plus** wall formworks. It is made of steel profiles and steel sheet. Formwork removing element is present with all standard shuttering boards.

Lift shaft formwork

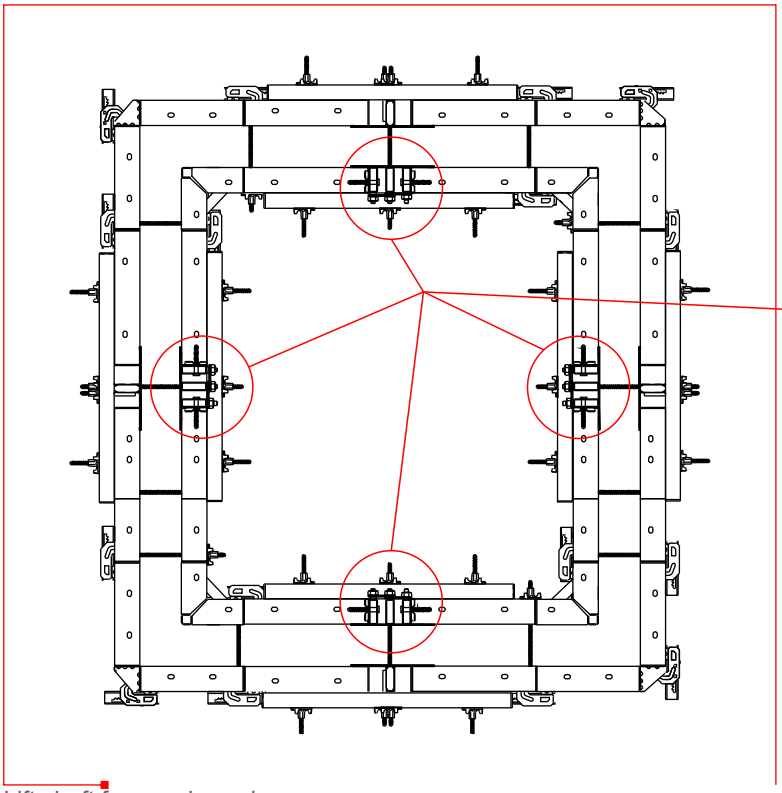

Lift shaft formwork – scheme

Formwork removing element

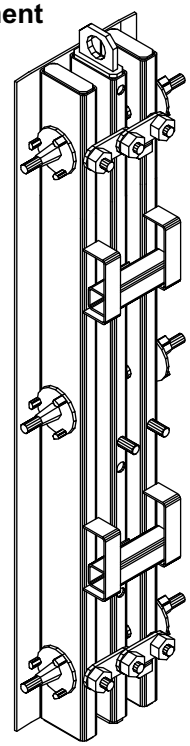

ASSEMBLY STEPS:

Lift shaft formwork assembly starts with a set-up of internal segment.

One formwork wall receives **one lift shaft element**. The width of boards and wooden inserts should be selected bearing in mind that the formwork removing element should be placed in symmetry axis of the set.

the steel sheet of formwork removing element fits tight to the plywood due to stiffening beams, which additionally straighten the formwork.

For comfort purposes it is advised to use 50 cm wide boards. It allows direct attachment to the formwork removing element.

Maximum diameter of the nut that connects formwork removing element with the basic board, is 10 cm.

Minimum internal size of the shaft, for which a shaft set can be used, is: 1.4 x 1.4 m. In this case, 30 cm wide boards are to be used.

The following step is an assembly of an external part of the formwork. The wall thickness needs to be established (it is the distance between the internal and external part). On the external part of the formwork, facing the place where formwork removing element is to be placed, complementary filling inserts should be installed. The set's component parts are connected with a boarding lock.

Assembled segment is taken to the building site and expanded to the needed size.

Formwork removal of the lift shaft formwork

DISASSEMBLY:

Lift shaft formwork disassembly is carried out by a crane and standard lifting slings. Formwork removing element is equipped with a hoisting eye to which lifting slings are attached.

Internal segment, after the removal of bowstrings, stiffening beams, brackets and other wall mounting equipment, is attached to lifting slings and removed vertically.

Vertical movement triggers the mechanism that reduces the size of a segment and loosens it for easy removal from the construction zone. The space that occurred between internal body of the shaft and the body of the internal segment **measures around 5 cm**. It is appropriate for easy segment removal. Once the lift shaft formwork is set up, it can be used on all levels of the building.

20cm

15cm

Formwork removing mechanism – 5 cm reduction of the formwork size

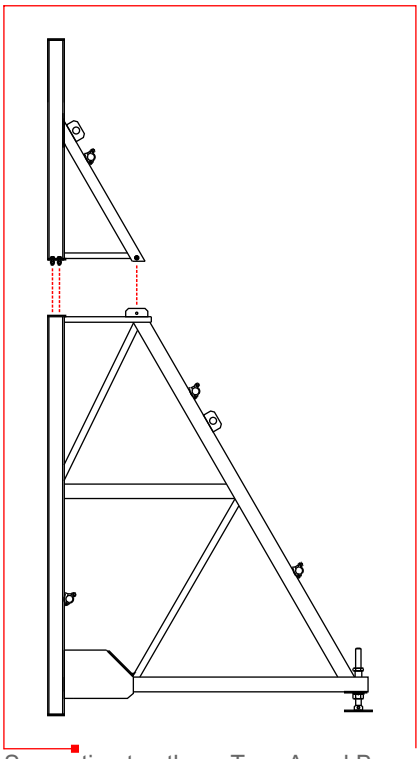

Supporting trestles – Type A and B - assembly scheme

Supporting trestles are especially useful during:

- escarp strengthening
- gravity wall construction
- concrete filling of the walls near existing buildings
- securing rocky mountainsides

Supporting trestle system includes:

1. Trestle brackets

Elements for the assembly of one-sided formwork used during vertical wall's concrete filling (the walls situated near existing buildings). Brackets allow the construction of 4.5 m-high walls with fresh concrete pressure of 100 kN/m 2 Use of two channels acting as a vertical beam allows easy assembly of shuttering boards with a bracket. Additionally, screw-threaded feet can help adjust the position of the one-sided formwork. Anchoring of the structure to the wall, ceiling or foundation, is essential. Anchoring element is in a form of a bar welded to the reinforcement (diameter and length of the bar is chosen with a reference to the forces of the concrete's pressure thrust).

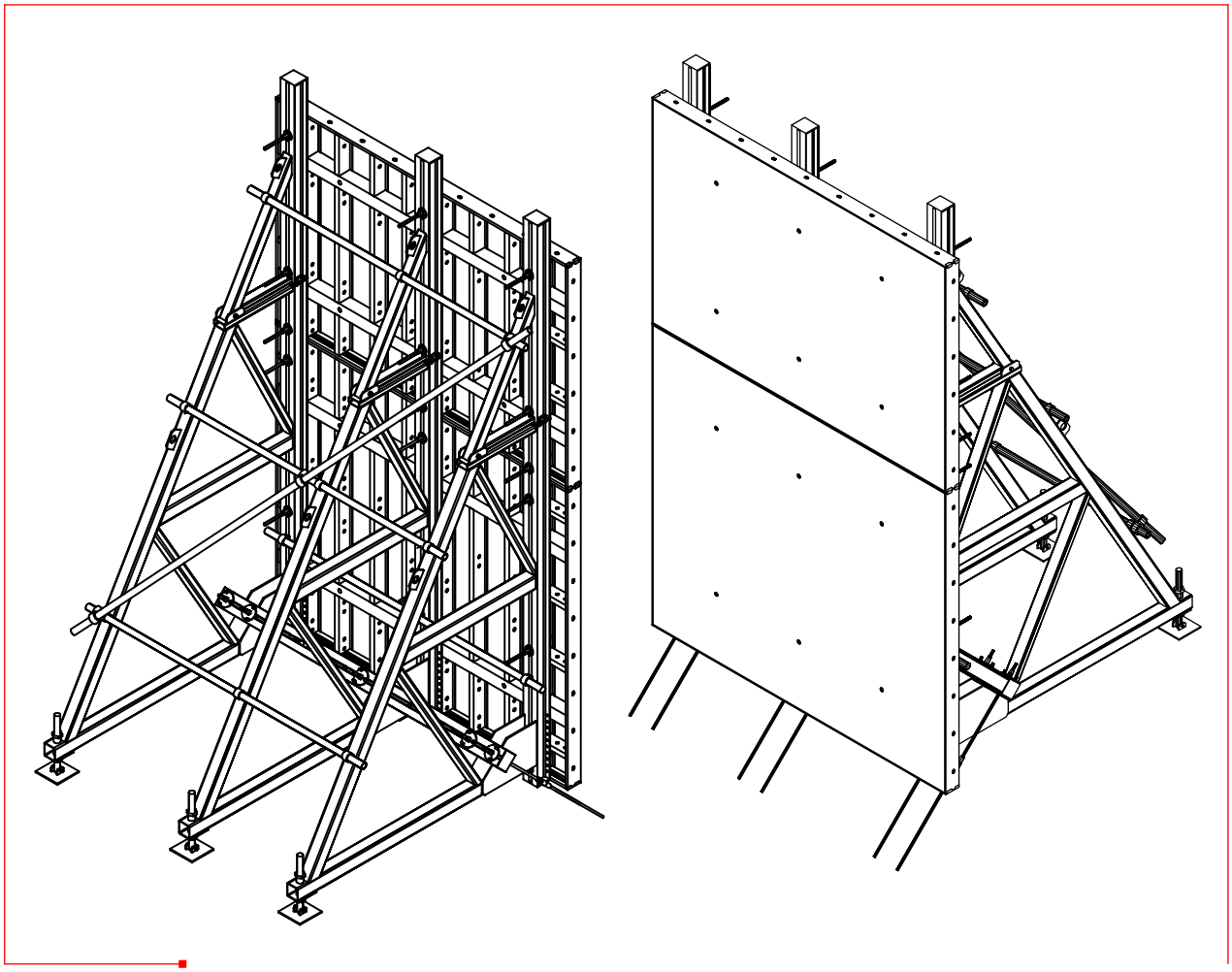

One-sided formwork with supporting trestles type A and B – scheme

2. Angle bracket

Serves for establishing the location of the shuttering board against the trestle bracket. It also prevents the board from dislocating under its own weight.

3. Wide angle bracket

Serves for establishing the location of the shuttering board against the trestle bracket, with the use of the stiffening beam. It also prevents the board from dislocating under its own weight.

4. Clamping beam – 1.2 m and 2.6 m

Serves for clamping the trestle brackets. Serves for relocating the horizontal concrete's pressure force to the anchors.

5. Trestle bracket – Type A and B

These brackets have different heights. Trestle bracket type B is used for concrete filling of the 2.9 m-high walls. Trestle bracket type A is used for concrete filling of the walls measuring above 2.9 m. In such case, it is placed onto the trestle bracket type B. Trestle bracket type A cannot be used separately. It is always used together with a trestle bracket type B. Trestle bracket type B can be used separately.

Other wall formwork elements

Other wall formwork elements that co-operate with trestle brackets, are following:

- rotary coupling
- angle bracket
- mid-sized angle bracket
- tighteners
- flanged nut
- stiffening beam
- bowstring
- universal pipe

Please remember that the structure of the supporting trestle requires proper anchoring to the base.

Supporting trestles – set assembly

POLE FORMING.

1. Pole forming with SP boards.

SP shuttering board is used during boarding of square and rectangular poles in the module placed every 5 cm, with a height of 5.4 cm and section ranging from 55x55 cm for **SP70** boards and 75x75 cm for **SP90** boards. Permissible concrete's pressure during pole forming with SP boards equals 80 kN/m^2.

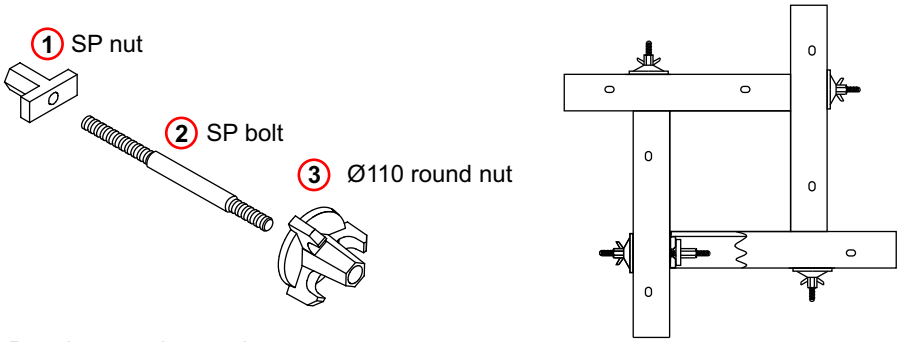

Board connection – scheme

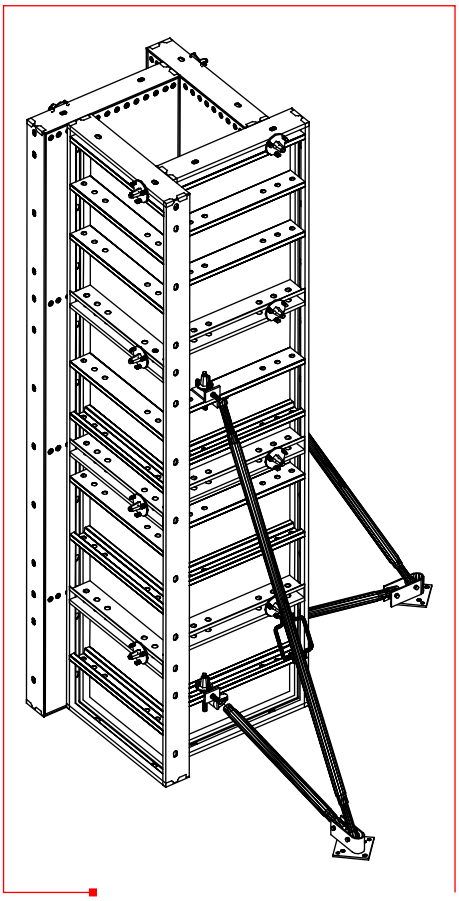

Pole forming – scheme

2. Pole forming with basic shuttering boards.

Poles that are higher than the board can be formed by placing the boards on top of each other and connecting them with a **BM710** lock.

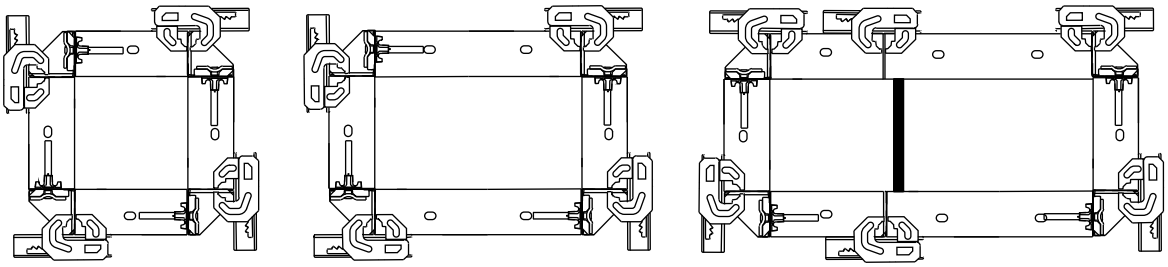

Pole forming – MIDI BOX boards and BM260 locks

MIDI BOX – building site – pole forming

1. MIDI BOX shuttering board [60 kN]

MIDI BOX – mid-size shuttering board system. Frames and ribbed shuttering boards are made of high endurance steel that was hot-dip zinc coated.

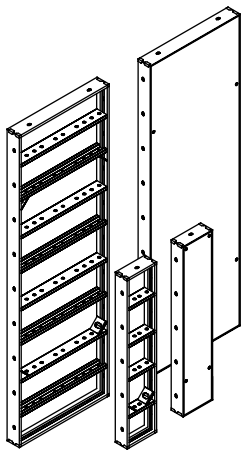

Index	Dimensions (cm)	Weight (kg)
a0215025	150x25	20.6
a0215030	150x30	22.1
a0215045	150x45	27.0
a0215050	150x50	28.4
a0215055	150x55	29.9
a0215060	150x60	31.4
a0215065	150x65	33.5
a0215075	150x75	36.7
a0215090	150x90	41.5
a0227025	270x25	35.4
a0227030	270x30	38.0
a0227045	270x45	46.3
a0227050	270x50	48.5
a0227055	270x55	51.2
a0227060	270x60	53.5
a0227065	270x65	57.0
a0227075	270x75	62.5
a0227090	270x90	70.8

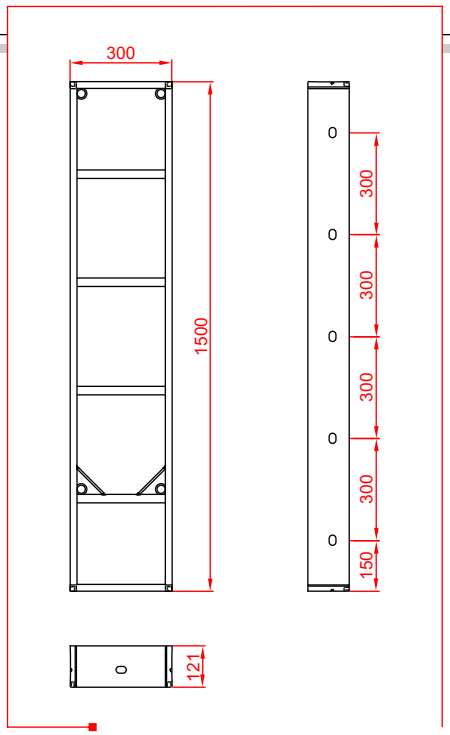

2. MIDI BOX Plus shuttering board [80 kN]

MIDI BOX Plus is a heavy, high load formwork system. MIDI BOX and MIDI BOX Plus are compatible and fully co-functioning. All junction and additional elements in MIDI BOX system can be used in MIDI BOX Plus.

Index	Dimensions (cm)	Weight (kg)
a0427075	270x75	83.8
a0427090	270x90	93.7
a0427120	270x120	168
a0427180	270x180	260
a0427240	270x240	315
a0430025	300x25	53.3
a0430030	300x30	56.3
a0430040	300x40	63.0
a0430045	300x45	66.0
a0430050	300x50	68.6
a0430055	300x55	71.8
a0430060	300x60	73.9
a0430065	300x65	78.3
a0430075	300x75	92.7
a0430090	300x90	103
a0430100	300x100	168
a0430120	300x120	186
a0430180	300x180	288
a0430240	300x240	348

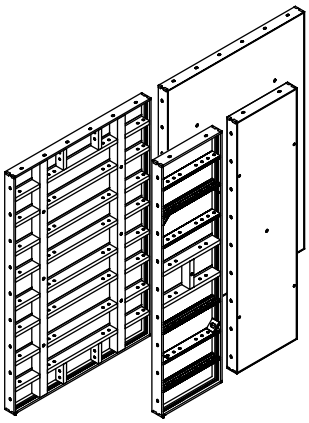

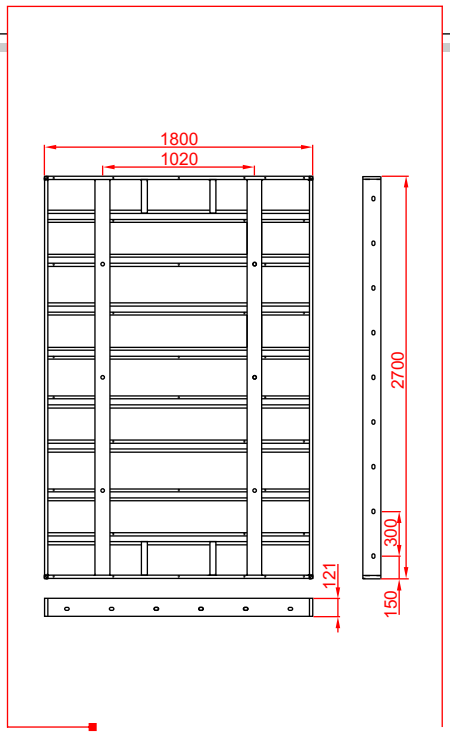

3. Internal corner

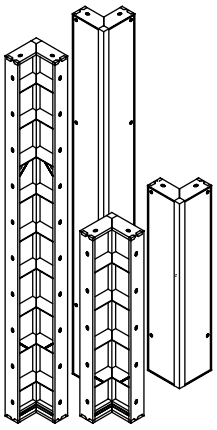

Serves for boarding of internal 90° angle.

Index	Dimensions(cm)	Weight (kg)
a0516150	150x30	40.3
a0516270	270x30	70.3
a0516300	300x30	89.3

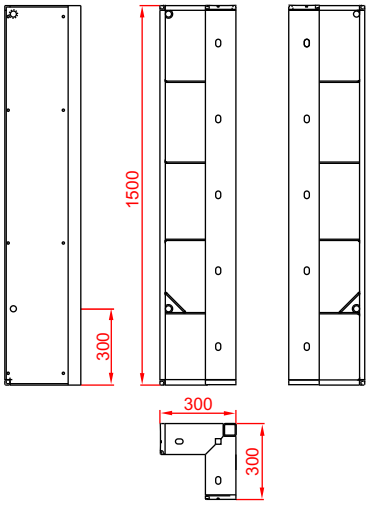

4. Hinged corner

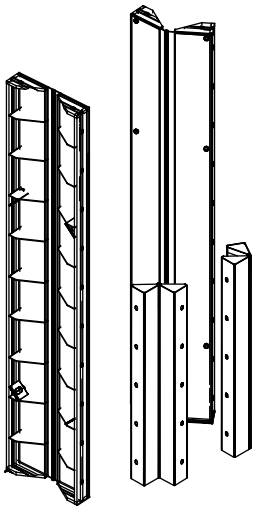

Serves for boarding of internal and external angles measuring 60° up to 270°.

Index	Dimensions (cm)	Weight (kg)
a0517150	150x15	27.5
a0517270	270x15	48.2
a0517300	300x15	53.7
a0518150	150x30	40.9
a0518270	270x30	71.3
a0518300	300x30	93.2

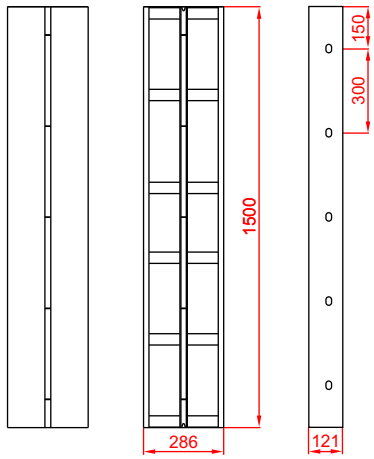

5. External corner

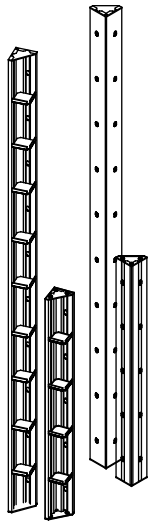

Used for fast connection of shuttering boards in external, rectangular angles.

Index	Dimensions (cm)	Weight (kg)
a0515150	150x12	14.2
a0515270	270x12	25.3
a0515300	300x12	26.8

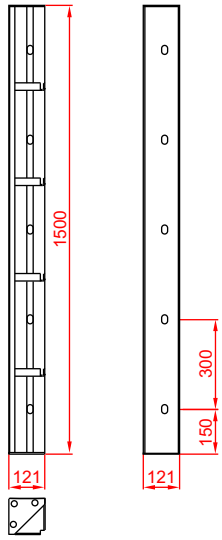

6. Boarding lock

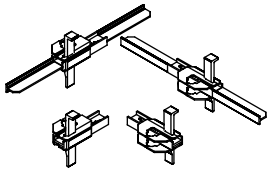

BM multipurpose boarding lock. Also straightens and stiffens the formwork.

Nazwa	Index	Dimensions (cm)	Weight (kg)
BM260	a0901260	L=26; B=5.7	4.55
BM710	a0902710	L=71; B=5.7	7.47

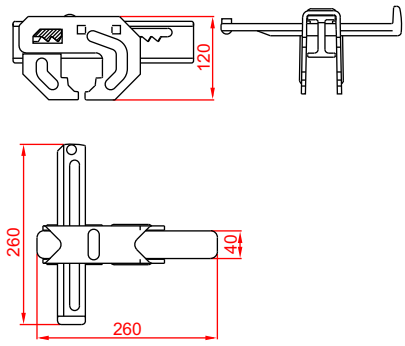

7. Circular slats

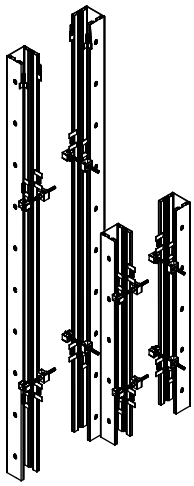

Serves for boarding of arched structures with 2.5 m of radius. Three circular slat models are available. Each with different width: 15, 20 and 25 cm. Circular slats, MIDI BOX and MIDI BOX Plus boards can be used for precise boarding set-up, without the use of filling inserts.

Index	Dimensions (cm)	Weight (kg)
a0715150	15x150	18.8
a0715270	15x270	31.9
a0715300	15x300	37.5
a0720150	20x150	20.2
a0720270	20x270	34.1
a0720300	20x300	40.7
a0725150	25x150	21.6
a0725270	25x270	34.3
a0725300	25x300	44.0

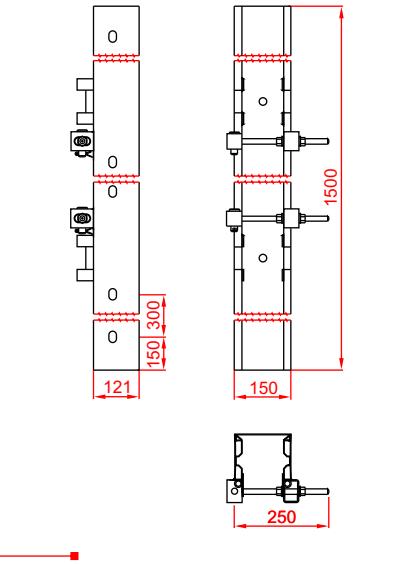

8. Bowstring's beam

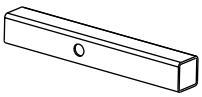

Relocates the load from the bowstring to circular slats.

Index	Dimensions (cm)	Weight (kg)
a0730001	350x50	1.56

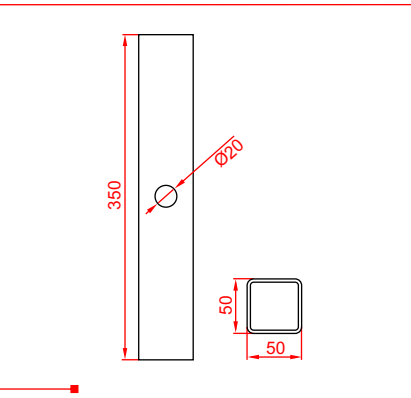

9. Tilt support

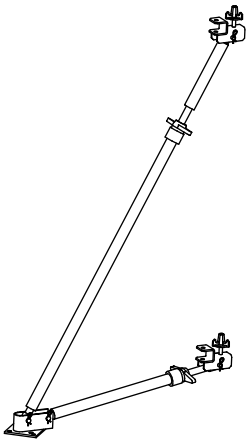

Serves for plumbing of the shuttering boards – 1.5 m; 2.5 m and 3.0 m (The support does not relocate the concrete's pressure).

Index	Dimensions (cm)	Weight (kg)
a0904001	180	20.6
a0904002	242	28.5

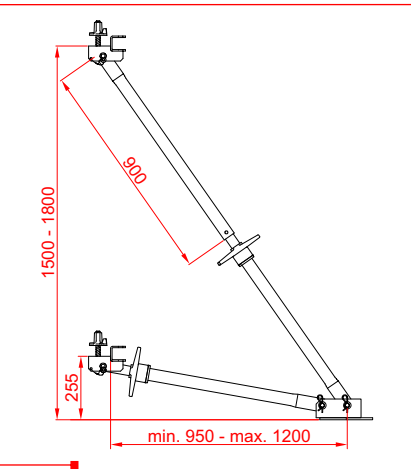

10. Raking shore

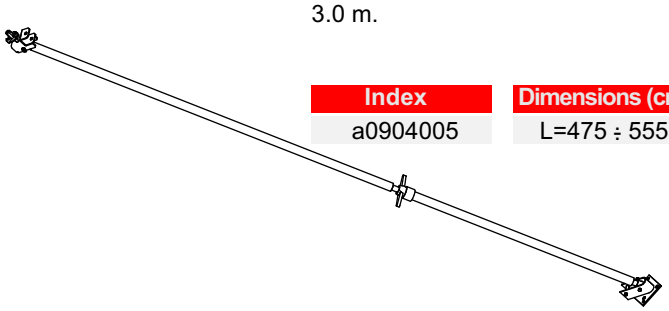

Serves for plumbing of the high wall formwork — above 3.0 m.

Index	Dimensions (cm)	Weight (kg)
a0904005	L=475 ÷ 555	34.9

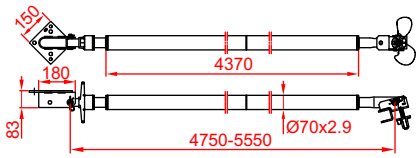

11. Tilt support handle

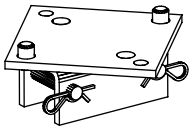

Applied with climbing shuttering's bracket set. Serves for attaching the tilt support and raking shore to the bracket.

Index	Weight (kg)
a0915005	3.53

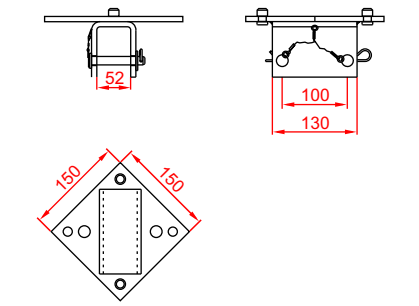

12. Prop head

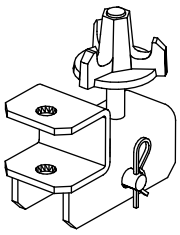

Among others, it connects formwork supports with shuttering boards. Prop head is an integral part of: tilt support and raking shore. It is also available as a service part.

Index	Weight (kg)
a0904010	2.16

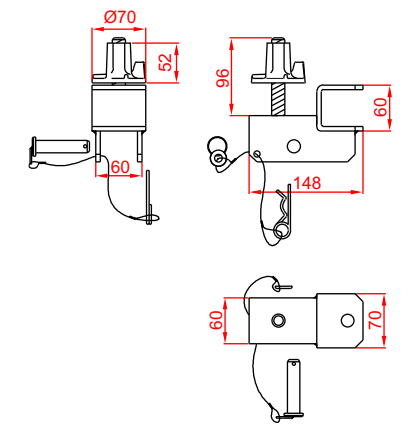

13. Prop link

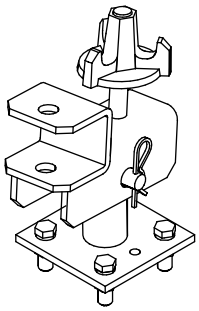

Serves for connecting the ceiling support with the formwork. Link can be used together with a support as a tilt support.

Index	Weight (kg)
a0904011	3.60

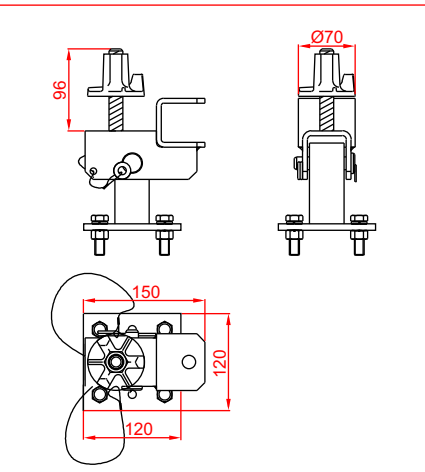

14. Support's foot

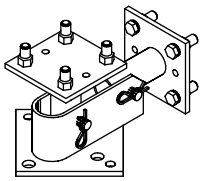

Serves for placing the support on the base. Support's foot can be used together with a support as a tilt support.

Index	Dimensions (cm)	Weight (kg)
a0904012	9.90	5.75

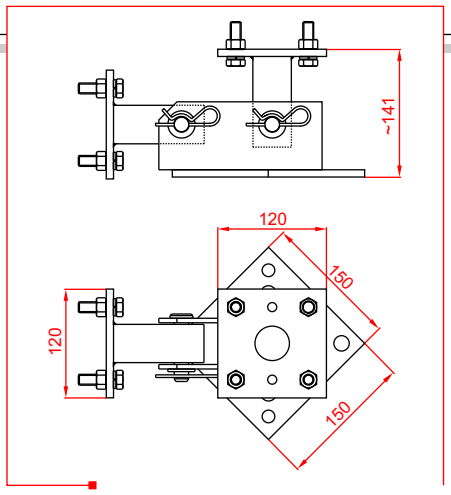

15. Lock-nut for ceiling prop

Serves for locking of the ceiling support. The ceiling support can be used together with a foot and prop coupler as a tilt support, after shuttering board's plumbing.

Index	Dimensions (mm)	Weight (kg)
a0009064	Ø64	0.66
a0009076	Ø75	0.85

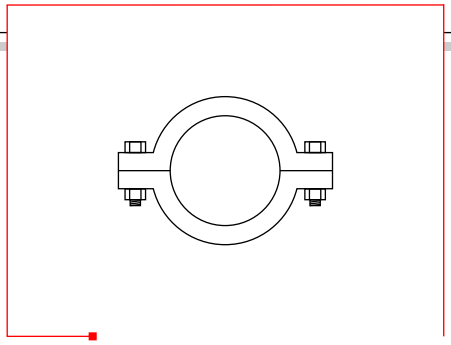

16. Stiffening beam

Serves for stiffening the shuttering boards and filling inserts's connections while keeping the formwork straight.

Index	Dimensions (cm)	Weight (kg)
a0960001	L=120	11.7
a0960003	L=260	24.1

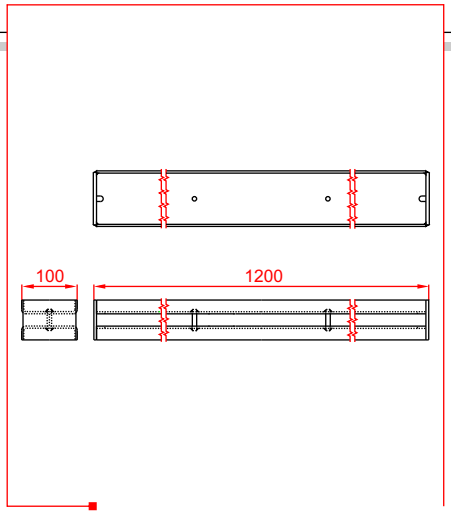

17. Boarding transom

Ensures the connection of the shuttering boards with filling inserts measuring above 15 cm of width. It retains the function of straightening and stiffening of the connection.

Index	Dimensions (cm)	Weight (kg)
a0970001	L=100	13.6

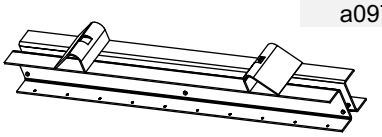

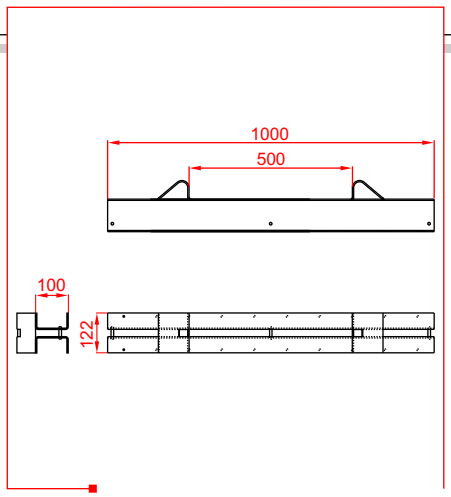

18. Tightener

Two pieces with a stiffening beam or tightening transom make a full set

Index	Dimensions (cm)	Weight (kg)
a0920001	L=30	0.80

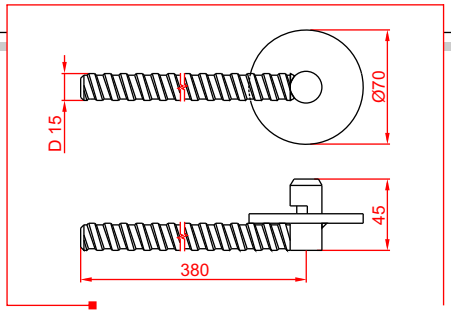

19. Working platform's bracket

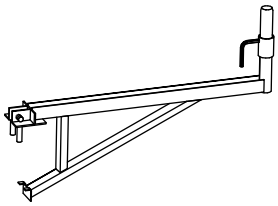

Attached to the openings in the shuttering board. Acts as a convenient basis for working platform's set-up.

Index	Dimensions (cm)	Weight (kg)
a0951000	L=96	10.8

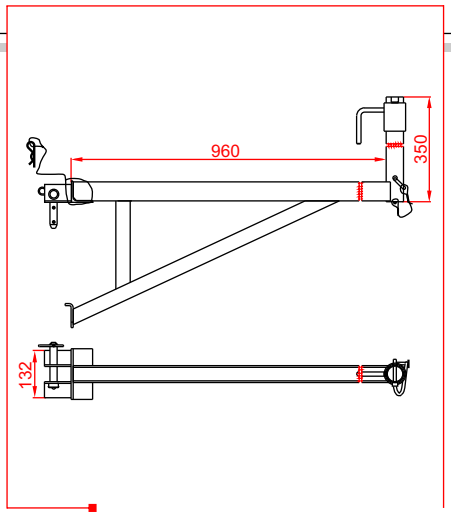

20. Working platform's post

Inserted into the openings of the working platform's bracket. Serves for fastening wooden railings that secure the activities on the working platforms. It also allows the attachment of the shuttering boards on the internal edge of the formwork.

Index	Dimensions (cm)	Weight (kg)
a0970002	L=108.50	2.89

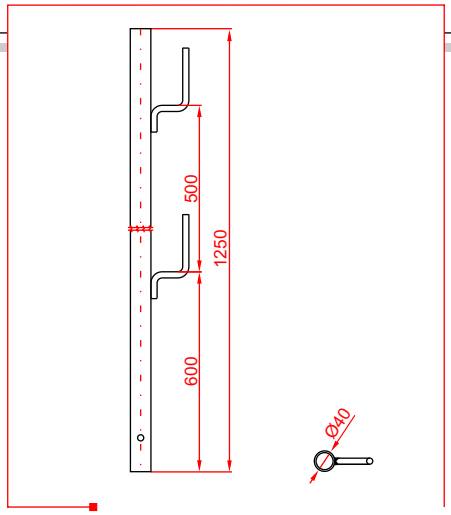

21. Wall bracket

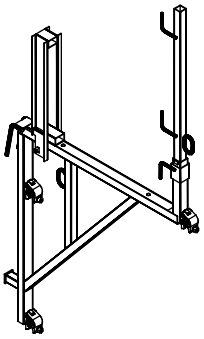

Serves for assembling wooden working platforms on the existing walls, and for supporting the climbing shuttering.

Index	Dimensions (cm)	Weight (kg)
a0950000	L=100 H=220	31.0

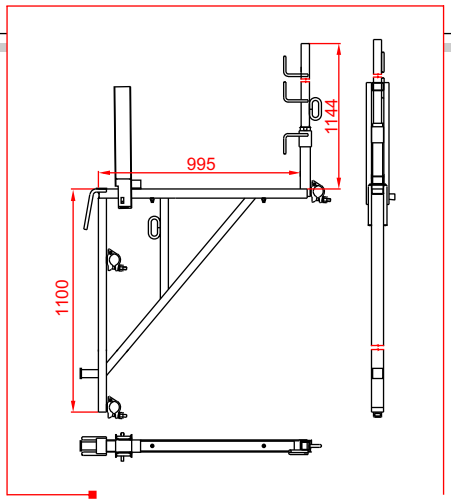

22. Climbing shuttering's bracket

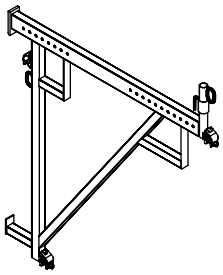

Serves as a support for the climbing shuttering.

Index	Dimensions (cm)	Weight (kg)
a0915003	L=160 H=180	40.9

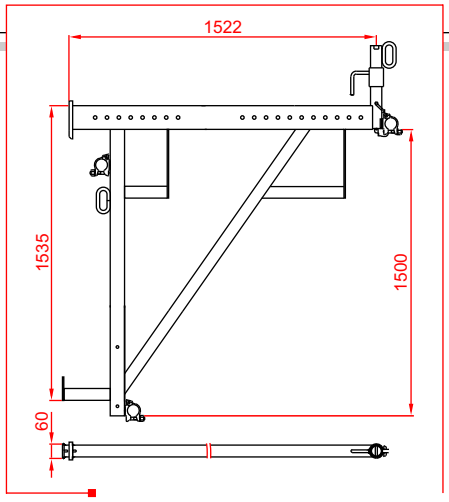

23. Additional platform's bracket

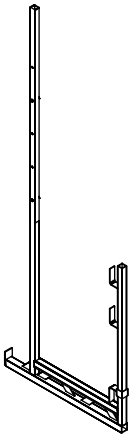

Used together with climbing shuttering's bracket.
Serves for disassembly of bracket's latch.

Index	Dimensions (cm)	Weight (kg)
a0952000	L=101 H=280	27.9

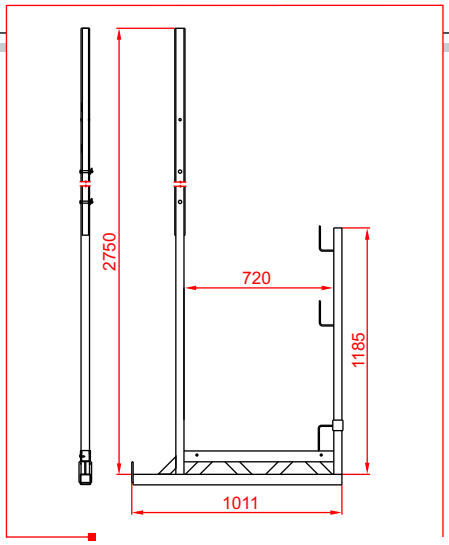

24. Bracket's grip

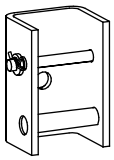

Used together with climbing shuttering's bracket.
Serves for installing brackets on the walls.

Index	Weight (kg)
a0915004	4.83

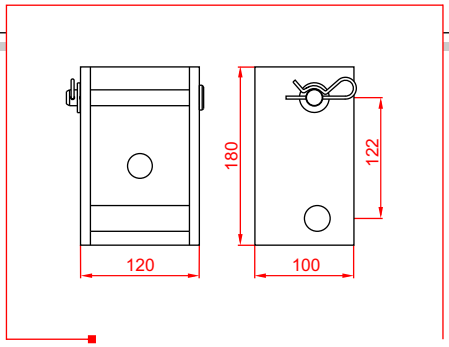

25. Wooden filling inserts

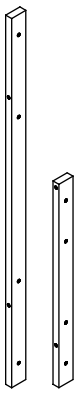

Used for compensation of formwork dimensions with graduation of 5 cm.

Index	Dimensions (cm)	Weight (kg)
a0604150	150x12x5	5.10
a0604270	270x12x5	9.40

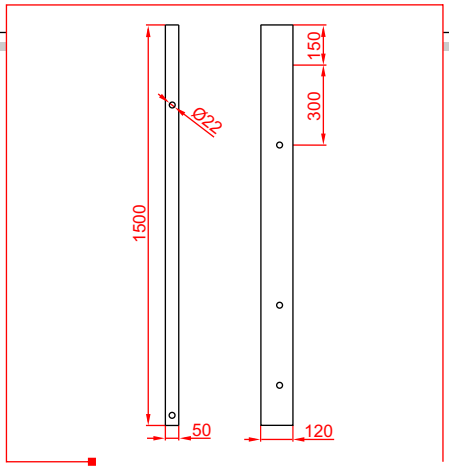

26. Steel filling inserts

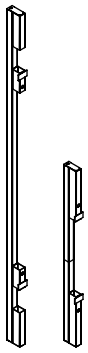

Steel inserts (alike wooden) are used for compensation of formwork dimensions with graduation of 5 cm.

Index	Dimensions (cm)	Weight (kg)
a0605150	150x12x5	10.5
a0605270	270x12x5	15.9

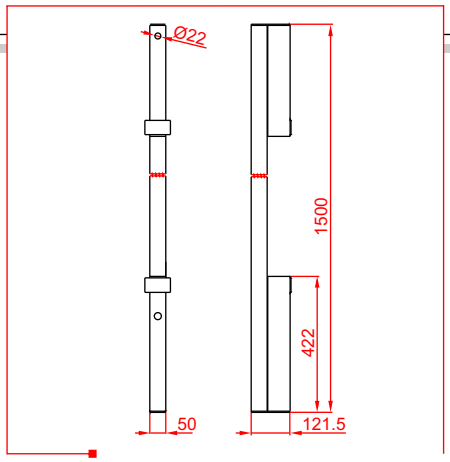

27. Complementary filling inserts

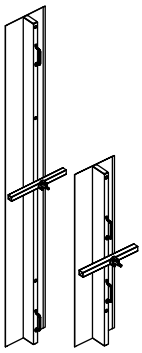

Serves for smooth compensation of the length of the formwork within the scope 7–30 cm.

Index	Dimensions (cm)	Weight (kg)
a0636150	36x150	29.0
a0636270	36x270	49.3
a0636300	36x300	54.4

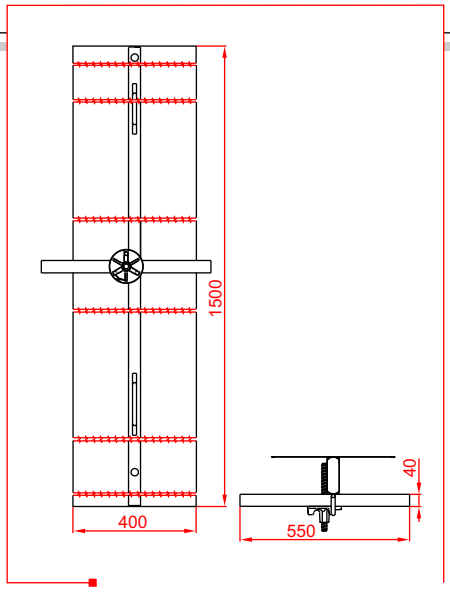

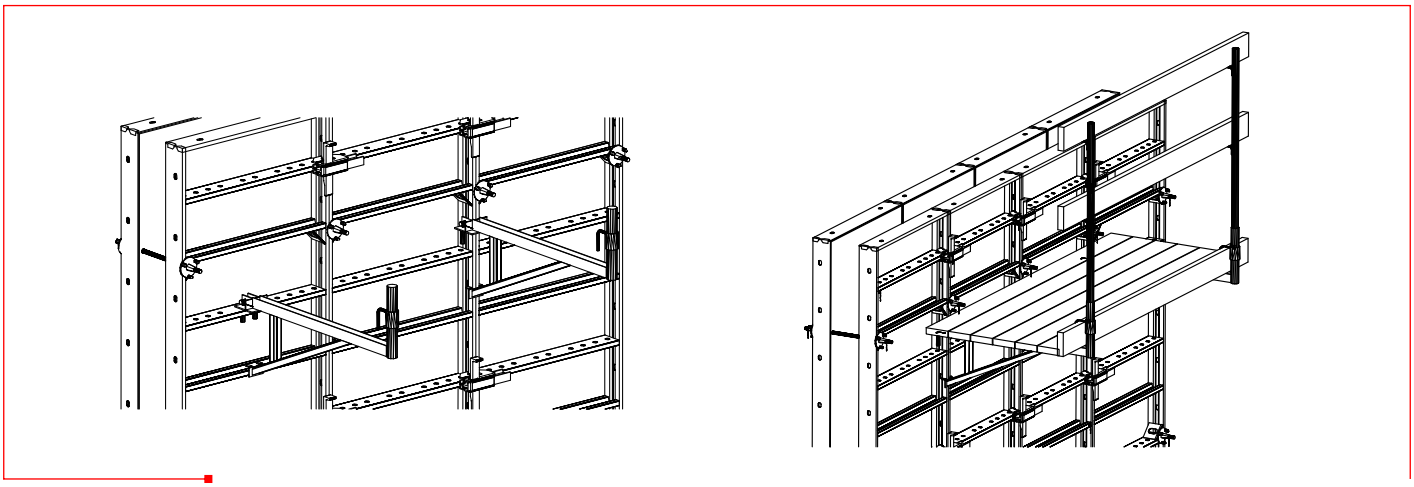

Working platform's assembly – scheme

28. SP shuttering board

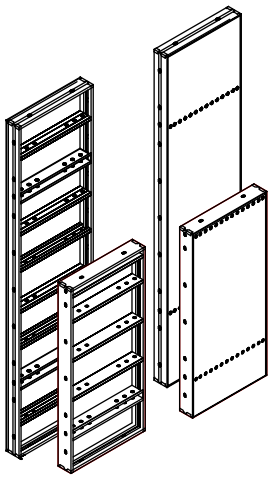

Apart from serving as a base shuttering board, it also allows boarding of square and rectangular poles in the module placed every 5 cm, with a height of 5.4 cm and section ranging from 55x55 cm for SP70 boards, and 75x75 cm for SP90 boards.

Index	Dimensions (cm)	Weight (kg)
a0315070	150x70	39.4
a0315090	150x90	49.3
a0327070	270x70	64.9
a0327090	270x90	112
a0330070	300x70	91.9
a0330090	300x90	126

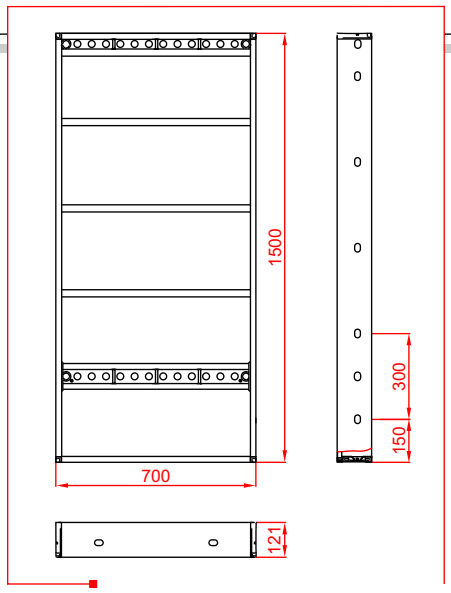

29. SP bolt

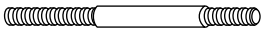

Used with SP nut, serves for connecting the SP shuttering boards.

Index	Dimensions (cm)	Weight (kg)
a2550000	Ø15x295	0.70

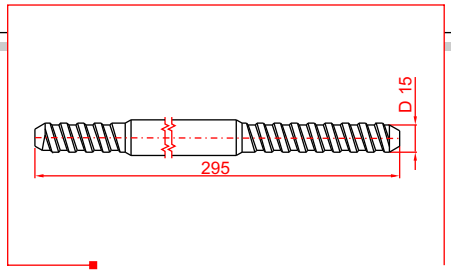

30. SP special nut

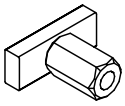

Used with SP bolt, serves for connecting the SP shuttering boards.

Index	Dimensions (cm)	Weight (kg)
a2535000	30x80x65	0.50

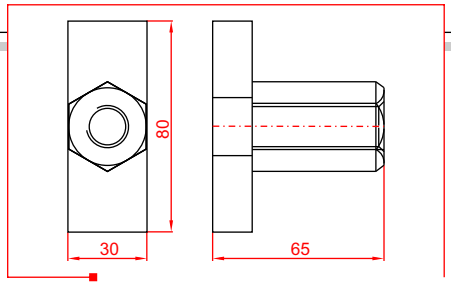

31. Boarding bowstring

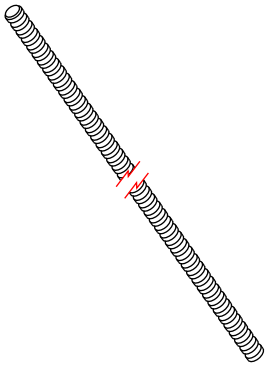

With DYWIDAG thread, hot rolled, black or hot-dip zinc coated. Length adjusted according to client's requirements. Their length, however, cannot exceed 600 cm.

Index	Dimensions (cm)	Weight (kg)
a0815075	15x75	1.08
a0815100	15x100	1.43
a0815120	15x120	1.72
a0815130	15x130	1.87
a0815150	15x150	2.10
a0815175	15x175	2.50
a0815200	15x200	2.86
a0815250	15x250	3.58
a0815300	12x300	4.30

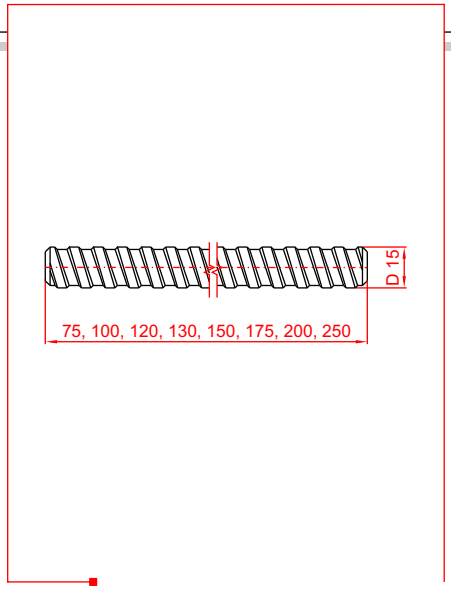

32. Edge catch

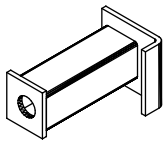

Serves for connecting shuttering boards by its side edges.

Index	Dimensions (cm)	Weight (kg)
a0910001	L=12	0.76

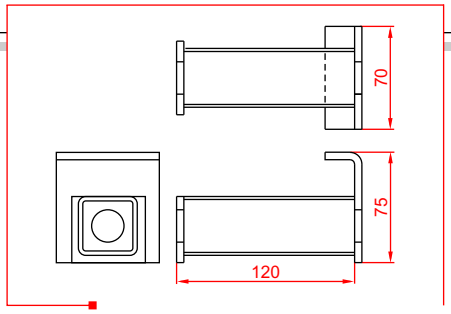

33. Flanged nut

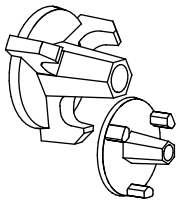

Basic element, used as the set with DYWIDAG formwork bowstring, serves for MIDI BOX elements connection. Permissible load – 90 kN.

Index	Dimensions (mm)	Weight (kg)
a2510070	Ø70	0.40
a2510110	Ø110	0.80

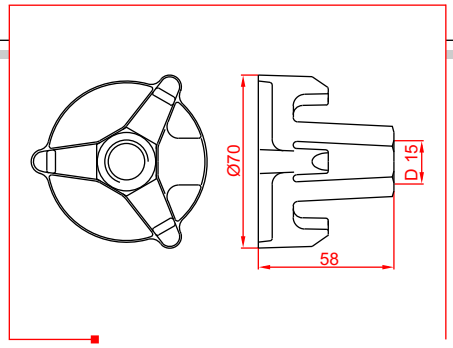

34. Nut with tilt socket

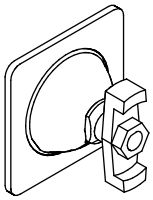

Self adjustable within the range of 15°. Permissible load – 90 kN. Can be used with boarding bowstring.

Index	Dimensions (cm)	Weight (kg)
a2530120	12x12	1.40

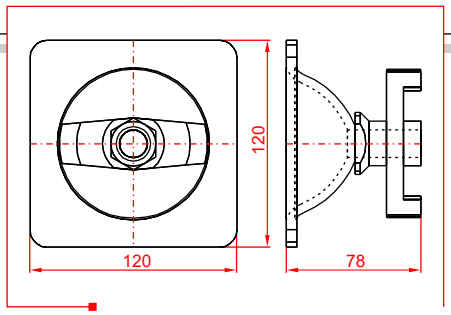

35. Centering bowstring

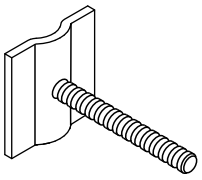

With DYWIDAG thread, hot rolled, hot-dip zinc coated. Used for connection of 15 cm wide articulated corner with shuttering board. Can be used for connection of shuttering boards through the oval openings in their side edges.

Index	Dimensions (cm)	Weight (kg)
a0815000	L=200	0.88
a0815001	L=120	0.77

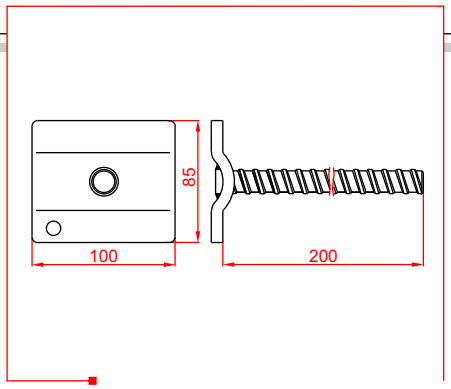

36. Centering nut

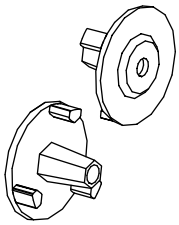

Used as a set with centering bowstring.

Index	Dimensions (mm)	Weight (kg)
a2532100	Ø100	0.60

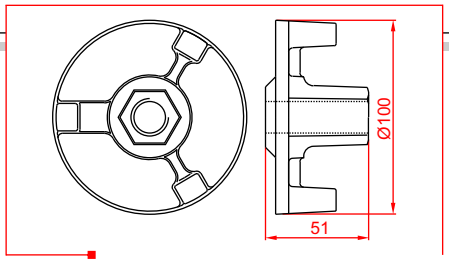

37. PCV D15 Ø26 mm distance pipe

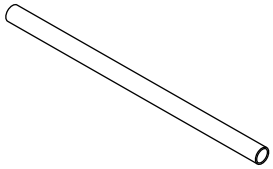

Pipe of 26 mm outside diameter and 22 mm inside diameter. Offered in 2.8 m long segments, to be cut to the required length of the building site. Serves as the "spacer" between formwork sides, also allows taking off the bowstring after concreting of the wall.

Index	Dimensions (mm)	Weight (kg)
a2540015	Ø26	0.20kg/m.b.

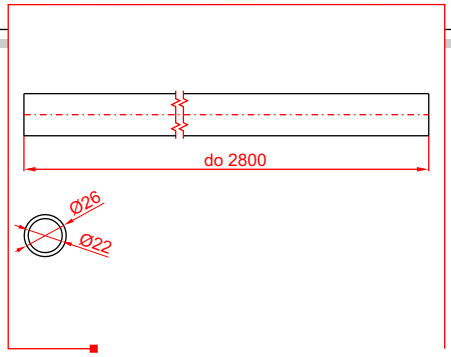

38. PCV D15 sealing cone

Protects the bowstring against concreting at the shuttering board surface.

Index	Dimensions (mm)	Weight (kg)
a2545015	Ø22	0.01

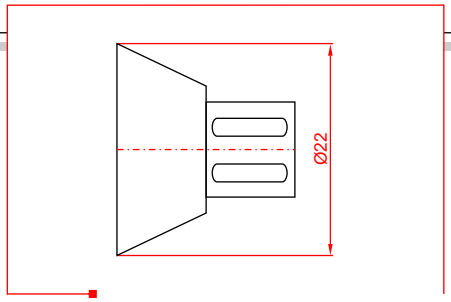

39. Distance clinch

Allows durable localization on reinforcement bars.

Index	Dimensions (mm)	Weight (kg)
a2550020	10x12	0.01
a2550030	30x12	0.01
a2550035	35x12	0.01

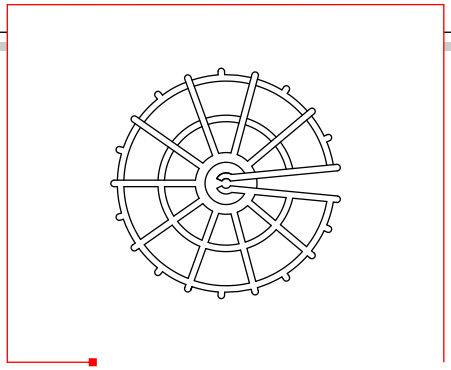

40. Waterproof coupling

Used for concreting of waterproof tanks, reservoirs, pools etc. Unrecoverable (remains in the concreted wall).

Index	Dimensions (mm)	Weight (kg)
a2555065	Ø110	0.80

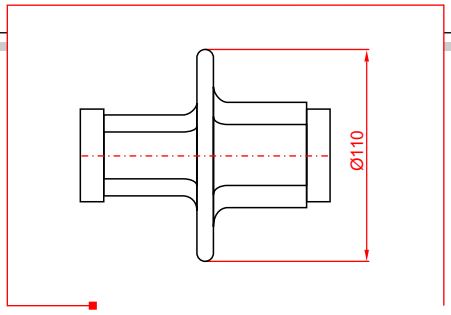

41. Hole plug

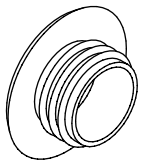

Used for blanking of free (not used) openings in shuttering boards. Hole plugs are differentiated by the openings they are used for

Purpose	Index	Dimensions (mm)	Weight (kg)
płyty MIDI BOX	a2565001	Ø24x39-14	0.01
płyty MIDI BOX Plus	a2565002	Ø29x44-15	0.01
płyty SP	a2565003	Ø25x28-15	0.01
otwory owalne	a2565004	Ø20x27-32	0.01

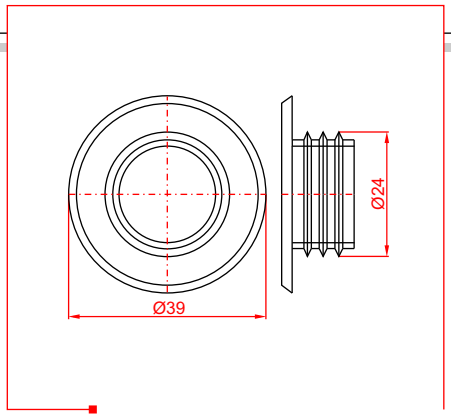

42. Catch for Horizontal transport

Serves for transporting shuttering boards in horizontal position, to the building site. Made of single piece of metal

Index	Dimensions (mm)	Weight (kg)
a0910000	148x16	0.76

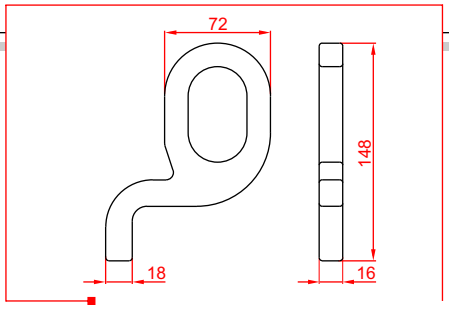

43. Hoisting hook

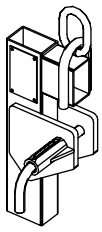

Attested by Technical Supervision Office (UDT), used for handling with crane shuttering boards connected in sets up to 30 sqm. Maximum permissible lifting capacity – 1000 kg.

Index	Dimensions (cm)	Weight (kg)
a0908000	L=43	9.35

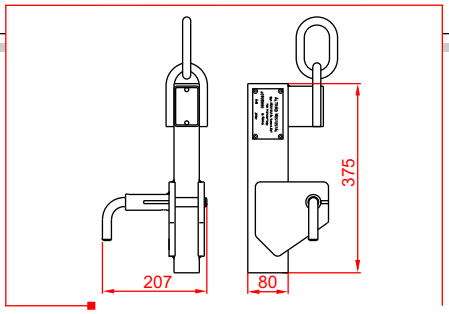

44. Lifting sling

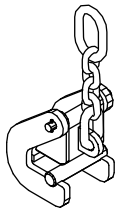

Serves for transport of single shuttering boards or connected in shuttering sets. Permissible lifting capacity – 800 kg.

Index	Dimensions (cm)	Weight (kg)
a0909000	L=15	5.96

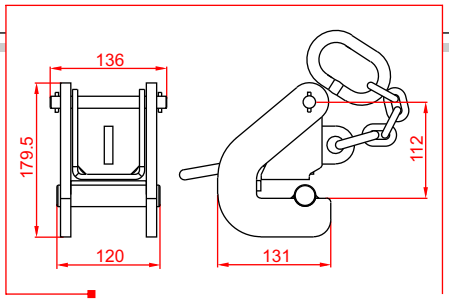

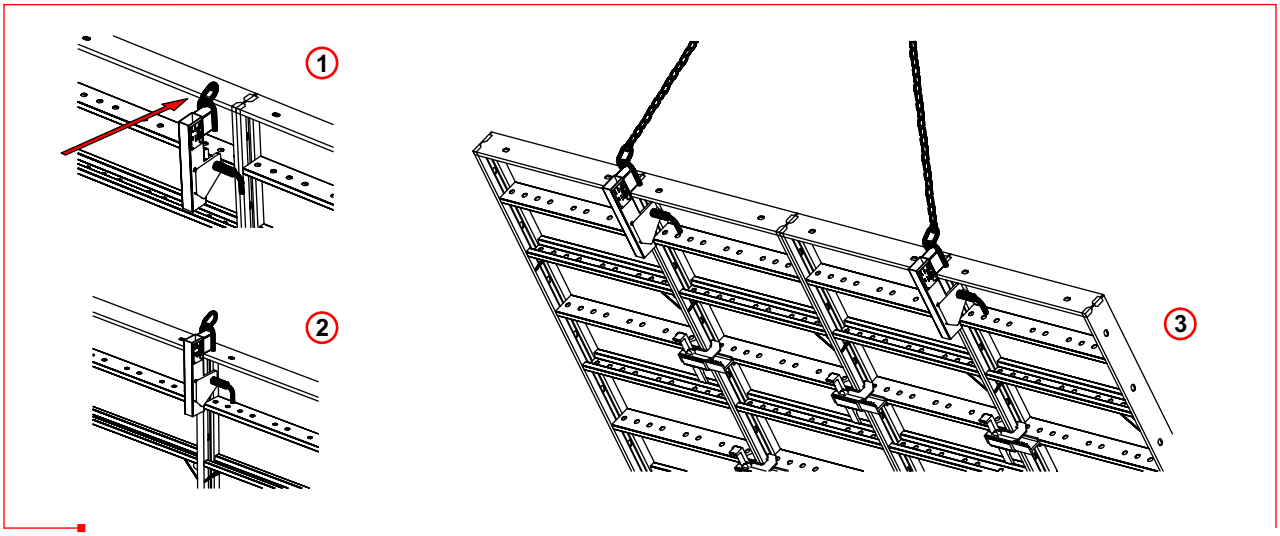

Hoisting hooks – application

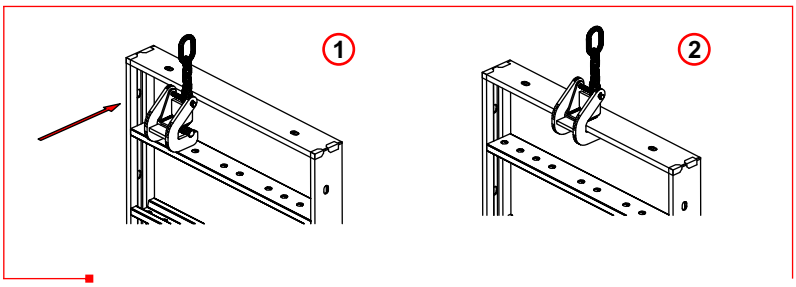

Lifting sling – assembly example

45. Formwork removing element

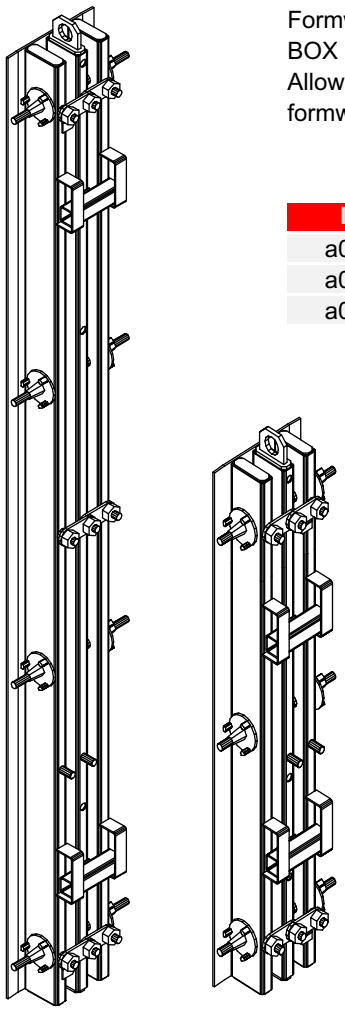

Formwork removing element can be used with MIDI BOX and MIDI BOX Plus wall formworks.
Allows formwork removal of internal section of the formwork without the need of full disassembly.

Index	Dimensions (cm)	Weight (kg)
a0640150	20x150	67.2
a0640270	20x270	114
a0640300	20x300	125

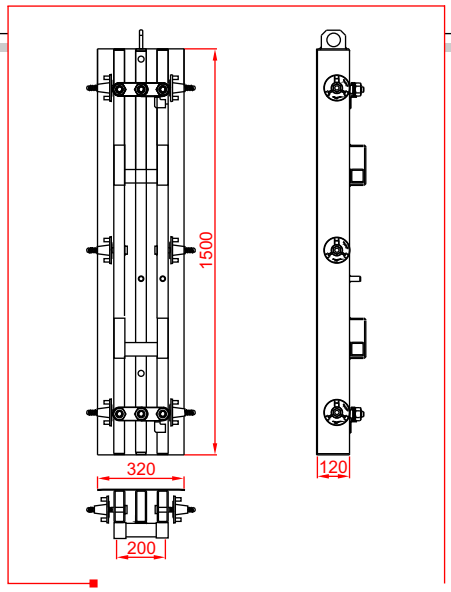

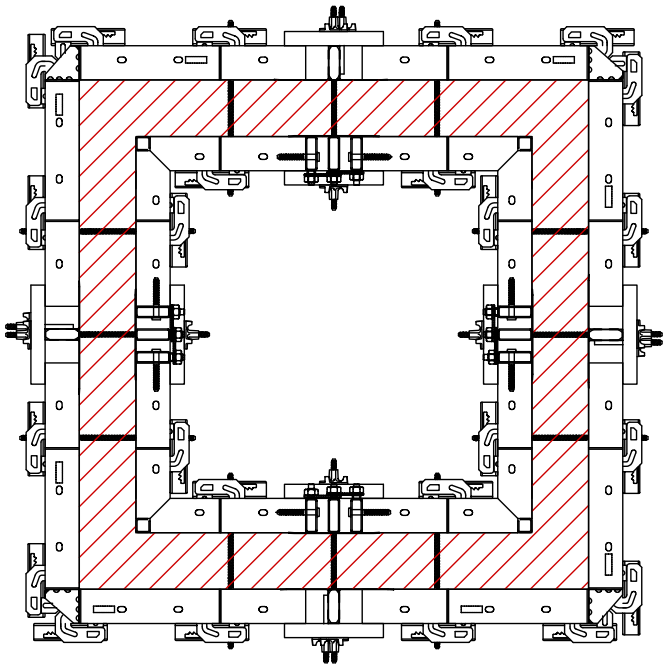

Full lift shaft formwork set-up example.

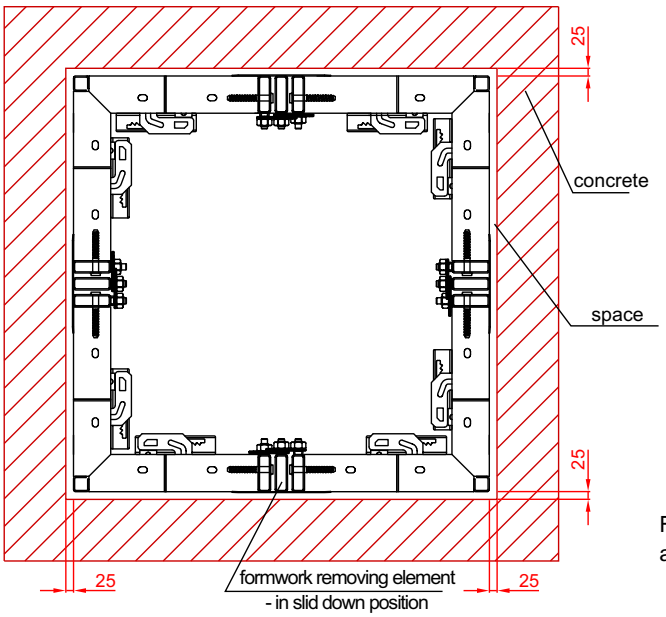

Formwork removal in progress, after concrete dried down

46. Trestle bracket type A

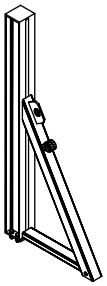

A 1.6 m-high component that cooperates with Type B bracket trestle (a0995002) and provides one-sided formwork support up to the height of 4.5 m with fresh concrete pressure of 100kN/m².

Index	Dimensions (cm)	Weight (kg)
a0995001	L=56; H=160	48.7

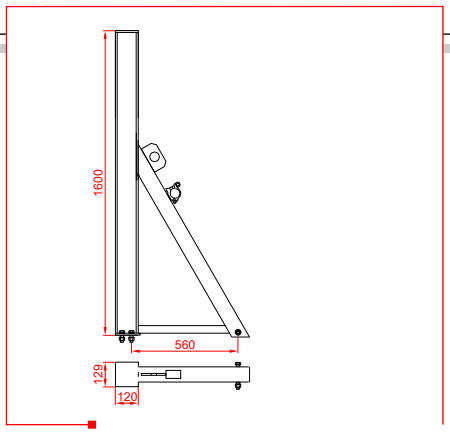

47. Trestle bracket type B

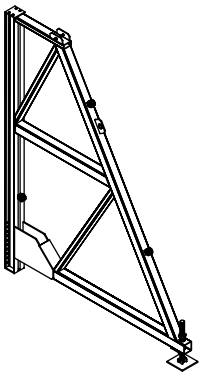

A 2.9 m-high component used for supporting one-sided formwork applied to concrete walls located nearby existing buildings, rocks etc. The construction requires proper anchoring in the base. With formwork heights above 2.9 m it cooperates with a bracket trestle type A (a0995001).

Index	Dimensions (cm)	Weight (kg)
a0995002	L=220; H=290	229

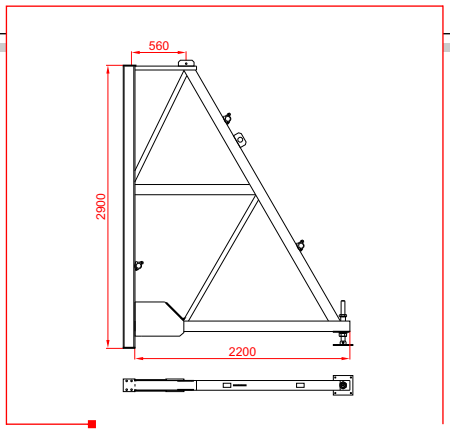

48. Clamping beam

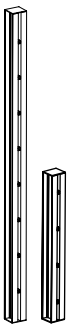

Serves for clamping the trestle brackets. Used to relocate the horizontal concrete's pressure thrust force to the anchors.

Index	Dimensions (cm)	Weight (kg)
a0996120	L=120	27.4
a0996260	L=260	57.6

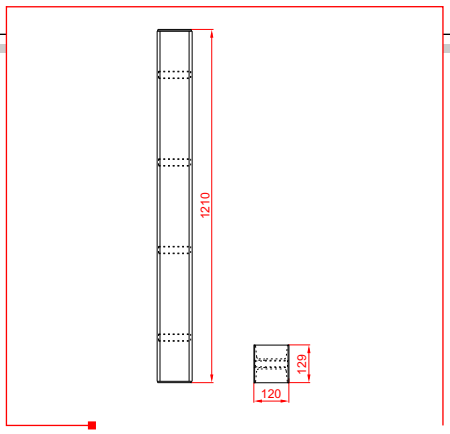

49. Angle bracket

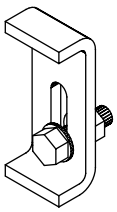

Used to establish the location of the shuttering board against the trestle bracket. It also prevents the board from dislocating under its own weight.

Index	Weight (kg)
a0997001	0.44

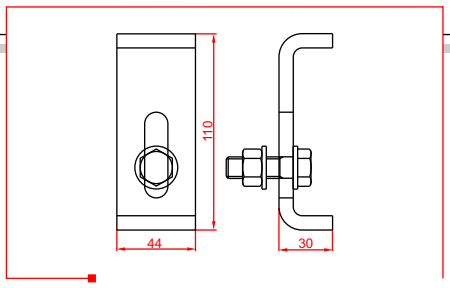

50. Wide angle bracket

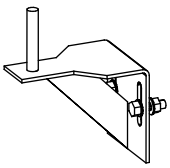

Used to establish the location of the shuttering board against the trestle bracket, with the use of the stiffening beam. It also prevents the board from dislocating under its own weight.

Index	Weight (kg)
a0997002	2.70

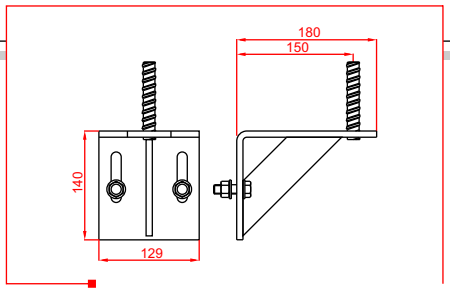

Building construction in ALTRAD-Mostostal technology

Table – support load for ceiling formwork

Permissible load (kN) for a given height, with a Factor of Safety equal Yk-1.5												
Index	Class "B"	Class "C"				Class "D"				Index	Class "D/B"	
Weight (kg)	16.95	22.65	30.5	32.9	36.1	17.0	20.4	23.8	39.1	Weight (kg)	16.0	19.0
Support's working height	a0002350	a0003400	a0003450	a0003500	a0003550	a0004300	a0004350	a0004400	a0004550	Wysokość robocza podpory	a0006300	a0006350
5.50					16.8				20.0	5.50		
5.40					17.5				20.0	5.40		
5.30					18.2				20.0	5.30		
5.20					18.9				20.0	5.20		
5.10					19.6				20.0	5.10		
5.00				18.5	20.4				20.0	5.00		
4.90				19.3	21.2				20.0	4.90		
4.80				20.1	22.1				20.0	4.80		
4.70				21.0	23.1				20.0	4.70		
4.60				21.9	24.1				20.0	4.60		
4.50			20.6	22.9	25.2				20.0	4.50		
4.40			21.6	23.9	26.3				20.0	4.40		
4.30			22.6	25.1	27.6				20.0	4.30		
4.20			23.7	26.3	28.9				20.0	4.20		
4.10			24.8	27.6	30.0				20.0	4.10		
4.00		23.2	26.1	29.0	30.0			20.0	20.0	4.00		
3.90		24.4	27.4	30.0	30.0			20.0	20.0	3.90		
3.80		25.7	28.9	30.0	30.0			20.0	20.0	3.80		
3.70		27.1	30.0	30.0	30.0			20.0	20.0	3.70		
3.60		28.6	30.0	30.0	30.0			20.0	20.0	3.60		
3.50	17.7	30.0	30.0	30.0	30.0		20.0	20.0	20.0	3.50		20.0
3.40	18.7	30.0	30.0	30.0	30.0		20.0	20.0	20.0	3.40		20.0
3.30	19.9	30.0	30.0	30.0	30.0		20.0	20.0	20.0	3.30		20.4
3.20	21.1	30.0	30.0	30.0	30.0		20.0	20.0	20.0	3.20		20.8
3.10	22.5	30.0	30.0	30.0	30.0		20.0	20.0	20.0	3.10		21.0
3.00	24.0	30.0	30.0	30.0	30.0	20.0	20.0	20.0	20.0	3.00	20.0	21.4
2.90	25.7	30.0	30.0	30.0		20.0	20.0	20.0		2.90	20.0	21.8
2.80	27.6	30.0	30.0	30.0		20.0	20.0	20.0		2.80	20.8	22.0
2.70	29.7	30.0	30.0			20.0	20.0	20.0		2.70	21.4	22.2
2.60	30.0	30.0	30.0			20.0	20.0	20.0		2.60	21.8	22.3
2.50	30.0	30.0	30.0			20.0	20.0	20.0		2.50	22.0	22.4
2.40	30.0	30.0				20.0	20.0	20.0		2.40	22.4	24.3
2.35										2.35		
2.30	30.0	30.0				20.0	20.0	20.0		2.30	22.7	26.5
2.20	30.0					20.0	20.0			2.20	24.8	28.9
2.10	30.0					20.0	20.0			2.10	27.2	30.0
2.00	30.0					20.0	20.0			2.00	30.0	30.0
1.90						20.0				1.90	30.0	
1.80						20.0				1.80	30.0	
1.75										1.75	30.0	
1.70										1.70		
1.60										1.60		
1.50										1.50		

Ceiling formwork systems offered by ALTRAD-MOSTOSTAL include:
- supports, H-beams and standard ceiling assembly plywood;
- ALUstrop system boards;
- supporting towers.


Ceilings supports

All the products represent modern design, usage safety, short assembly time and competitive pricing.
Ceiling formworks, including its additional elements, comply with most severe national and European regulations, thus are an example of best European quality.

Our company employs the constant production supervision, implements ISO 9001 Standards, has been granted the SLV welding acceptance for steel and aluminium products and received product safety certificates issued by Instytut Mechanizacji Budownictwa i Górnictwa Skalnego w Warszawie (Institute of Mechanised Construction and Rock Mining – Warsaw).

SYSTEM ADVANTAGES:
Precise and easy assembly guaranteed by:

- **single assembly scheme** (for ceiling up to 30 cm thick)
- **easy-to-use realising** —de-boarding mechanism— of ceiling support
- **durable elements**, made of high quality materials
- **surface smoothness**
- **high load capacity**

Ceiling formworks – structure

STANDARD CEILING:

Its basic elements consist of steel supports and wooden H-beams. **Support's** height can be adjusted in the range of 1482 mm up to 5500 mm. **Wooden H-beams** are available in the length of 1800 mm , up to 5900 mm.

Ceiling supports are made of hot-dip zinc coated, anti-corrosive steel pipes. This kind of corrosion protection guarantees high resistance to environmental factors.

Wooden H-beams durability is guaranteed by **means of impregnation** (H-beams are made by world's leading manufacturers).

Ceiling formwork system means:

- easy assembly;
- work safety;
- low time expense;
- highly re-usable formwork set;
- economical solutions.

All of this adds to the profit of YOUR company.

Supports application – staircase

Ceiling formwork application
on the building site

Heads and H-beams are important elements of standard ceiling: the fork tongs spacing allows the safe installation of one H-beams, while after turning the head by 90 degrees — two wooden H-beams. **This system allows to comet H-beams to any length without necessity of additional supports installation.** The head is installed inside the support by mounting the head mandrel in the top opening of the support.

H-beams on the cross head

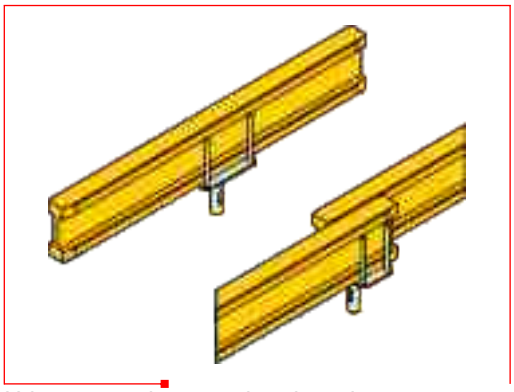

H-beams on the cross head – scheme

Wooden formwork H-beam is glued with special resins for construction joints. The resins are approved by Glue and Adhesives Institute Nordisk Limtrenemnd in Norway and German Forschungs und Materialprüfungsanstalt Baden-Württemberg.
The whole H-beam is impregnated with formulation which guarantees durability in outdoor conditions – 5 years minimum, indoor conditions — 20 years minimum.


Formworks – building site


Wooden formwork H-beam

Innovative G-hook solution, present in available supports, allows quick formwork removal of ceiling by simple support height reduction (by 3 mm) and efficient disassembly.
At the formwork removal, with single hammer tap or twist with available bar or bowstring, the G-hook is turned up. The support mandrel has been lowered and the ceiling thrust has been "slackened". Only now the support mandrel can be slightly lowered with L-hook.

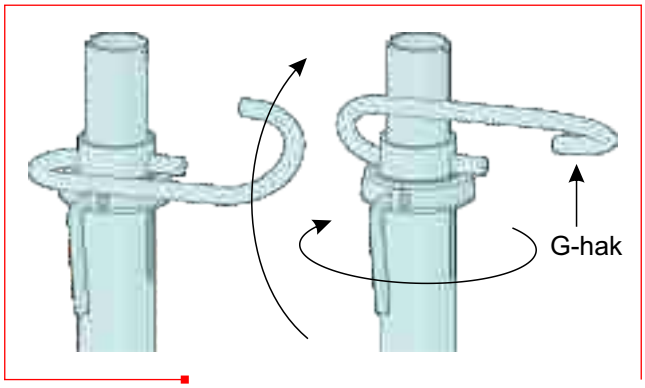

Sequence of actions during support load reduction with G-hook

One full turn (360 degrees) of the nut decreases or increases the formwork level by 1 cm.
Using ceiling supports we can set with lightning speed not only horizontal ceilings but also all the designed surfaces with slopes in any directions.

In practice, the supports can be used at building site not only in the said system. They are also indispensable in supporting and tensioning of lintels, beams, binders, balconies, TERRIVA and ACKERMAN ceilings and others.

Ceiling supports are basic elements of standard ceiling formwork system and ALUstrop.

The supports represent wide range of height adjustment. The adjustment is carried out in two stages:
a. in steps of every 10 cm and fitting of the G-hook in the support mandrel at the desired height;
b. precise adjustment — in range of 10 cm, by turning the nut on support mandrel. In this way we can precisely, with millimetre accuracy, level the ceiling surface.


Support application on the building site

Tripod for supports is another **common element of standard ceiling formwork system and ALUstrop**. It is used as a protection against overturn of supports during installation. Supports and tripods are independent elements. After support fastening, the tripod can be moved to next support. Each tripod leg can be individually set at any angle what allows setting of tripod in narrow rooms, at walls, in corners etc.

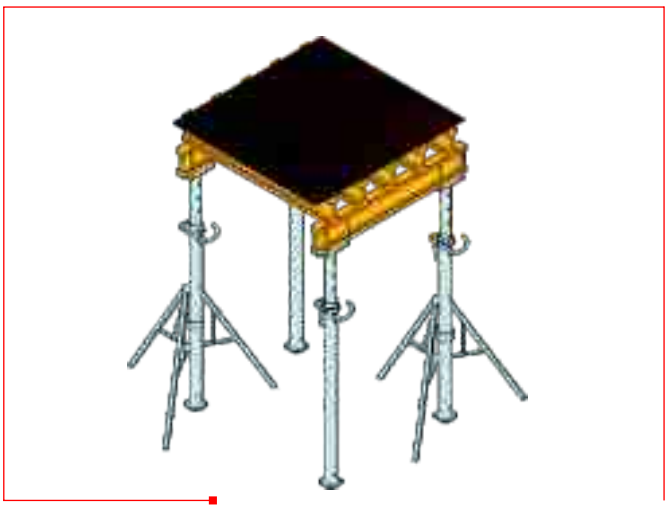

Tripod application – scheme

Support and tripod application on the building site

The support is fastened in tripod with special shifting lock what allows very fast engaging and disengaging the elements without the necessity of screwing. Recommended proportion of tripods to supports number is 1:3.

Post is an important and indispensable (from the Workplace safety point of view) formwork system element **we divide them into: rail posts, corner rail posts, universal rail posts**. The posts are used as the protective measure during construction.

Planks are used with the posts. Inserted into the bearings for railing, they act as protective railings. Depending on the needs, the post's structure allows it to be attached to the ceiling edge or to the ceiling formwork structure.
We offer three different kinds of posts. This allows the customer to choose the optimum number of the posts.

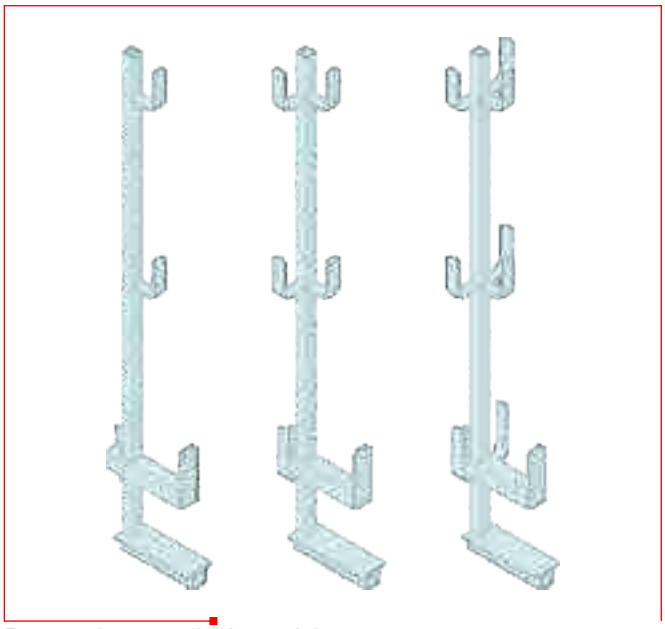

Posts – three available models

The basic element of ALUstrop structure is **an aluminium panel, available in different sizes**. Wide range of sizes, supplemented by adjustment shuttering boards, guarantees that the set will fit any ceiling. The gaps can filled with adjustment boards, adjustment and transverse beams or square timbers. The boards can be supported with building supports equipped with supporting heads. Maximum ceiling thickness is 50 cm. Longitudinal and transverse girders, being an ALUstrop system elements, are used for boarding places with poles made of reinforced concrete.

Innovative shape of framing profiles in the plywood assembly zone facilitates silicon preservation in the gaps between profile and plywood.

Framing profile structure allows draining of the bleeding water from the boards contact places. It secures profile's side surfaces from being soiled.

ALUstrop means:

A – **attractive pricing (economical with ceilings measuring above 100m^2);**
L – **light structure;**
U – **unhampered transport and storage (owing to light structure);**
S – **slick assembly and disassembly – ok. 0.2 h/m^2; for comparison – standard ceiling – ok. 0.55h/m^2;**
T – **tenacity of the elements (made of materials resistant to environmental factors);**
R – **rotaryness of the hardware during construction;**
O – **opportune smoothness of the obtained surface;**
P – **pleasure of setting up and dismantling a formwork.**


ALUstrop on building site


ALUstrop board during assembly


Aluminium panels
supported by supports

ALUstrop is supplemented by **an adjustment shuttering board** that, contrary to standard aluminium panel, has it's width adjustable in the range of 55 cm to 90 cm.

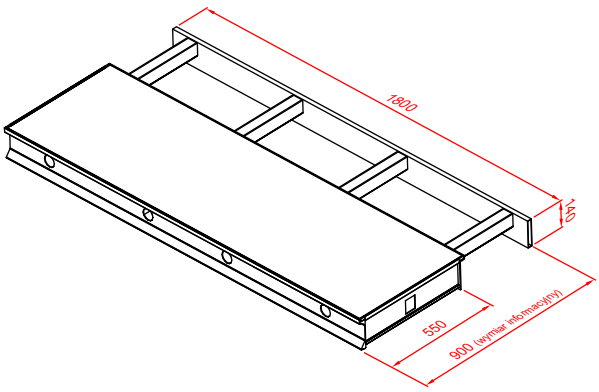

Tower's structure consists of steel frames with a support distance of 1.0 x 1.0 m and height stepped every 0.5 m. Infinitely variable adjustment **of tower's height** to desired values is obtained by expanding the footings and adjustable heads.

Tower's stiffness in both perpendicular directions is guaranteed by the rule of basic frame 90° rotation during tower's assembly, and by vertical bracings that stiffen subsequent frames.

Please remember that bracings merge the structure into inseparable piece, which is particularly important when considering vertical, crane transport of the tower.

Supporting tower is used during:
- boarding of monolithic building structures;
- supporting prefabricated elements of building structures;
- realization of supporting structures for working platforms;
- realization of gang-boards.

All S10 supporting tower's structure elements are hot-dip zinc coated.

For a tower	Set-up height [m]	Permissible load for a single stand [kN]	
		Without wind load	With wind load
not placed atop	5.50	**52.0**	**43.0**
	7.50	**51.6**	**41.0**
placed atop	5.50	**53.0**	**52.4**
	7.50	**53.0**	**51.0**
	12.50	**52.4**	**48.0**
	20.00	**50.4**	please consult the manufacturer

S10 tower load chart

S10 tower – realization of a monolithic building structure formwork

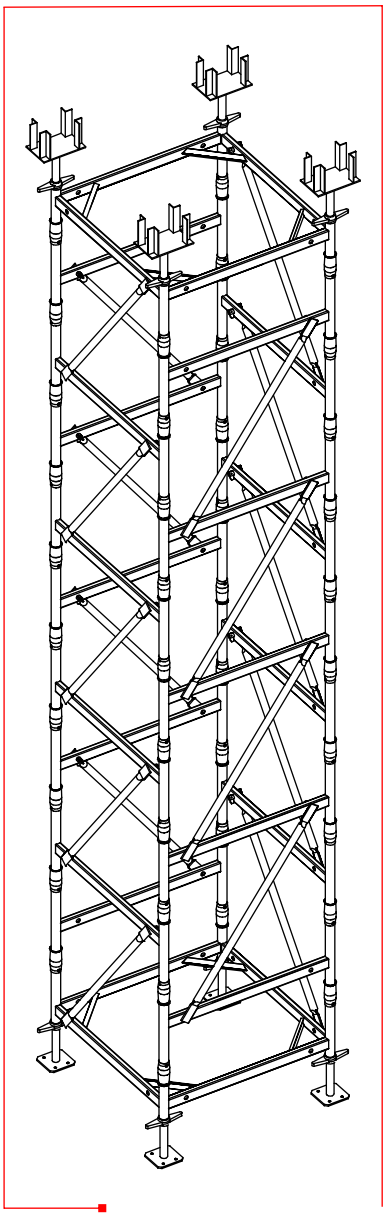

S10 supporting tower – scheme

51. Ceiling support (B, C, D)

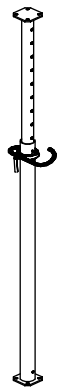

Supports are made of steel pipes secured with hot-dip zinc coating.

Index	Class	Weight (kg)
a0002350 B	Class B	16.9
a0003400 C	Class C	22.6
a0003450 C	Class C	30.5
a0003500 C	Class C	32.9
a0003550 C	Class C	36.1
a0004300 D	Class D	17.0
a0004350 D	Class D	23.0
a0004400 D	Class D	24.0
a0004550 D	Class D	36.0
a0006300 D/B	Class D/B	15.6
a0006350 D/B	Class D/B	17.5

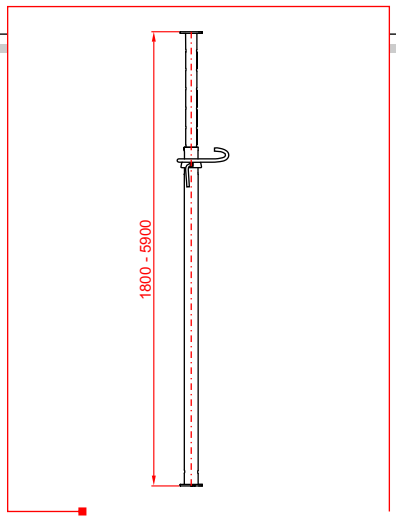

52. Tripod for supports

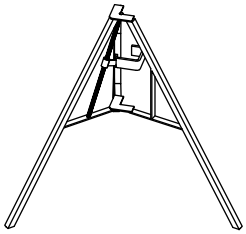

Serves as a protection against overturn of supports during boarding.

Index	Dimensions (cm)	Weight (kg)
a0025001	98	7.40

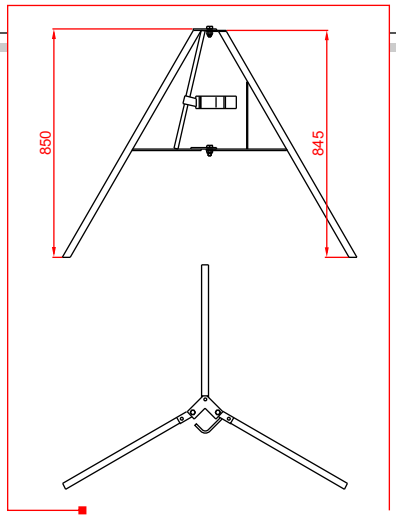

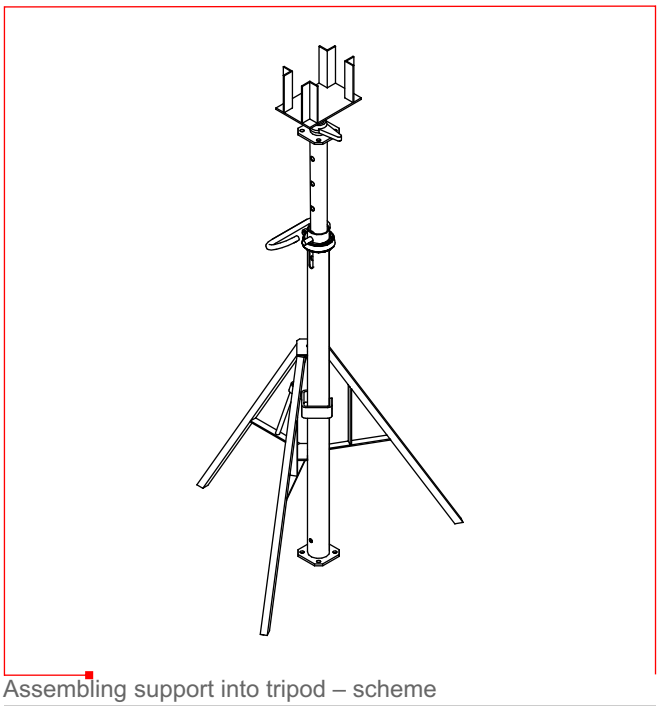

Assembling support into tripod – scheme

53. Wooden formwork H-beam

- full section beam of invariable form
- permissible bending moment – 5.0 kNm
- permissible distributed load – 11.0 kN
- beam web made of triple-layered glued panel
- dźwigar okuty

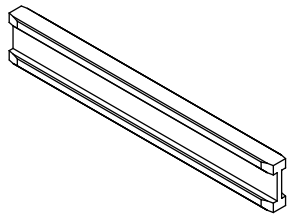

Index	Dimensions (cm)	Weight (kg)
a0010130	130	7.16
a0010165	165	9.01
a0010180	180	9.83
a0010245	245	11.7
a0010250	250	11.9
a0010265	265	12.7
a0010290	290	13.9
a0010330	330	15.8
a0010360	360	17.2
a0010390	390	18.7
a0010450	450	21.6
a0010490	490	25.2
a0010590	590	28.3

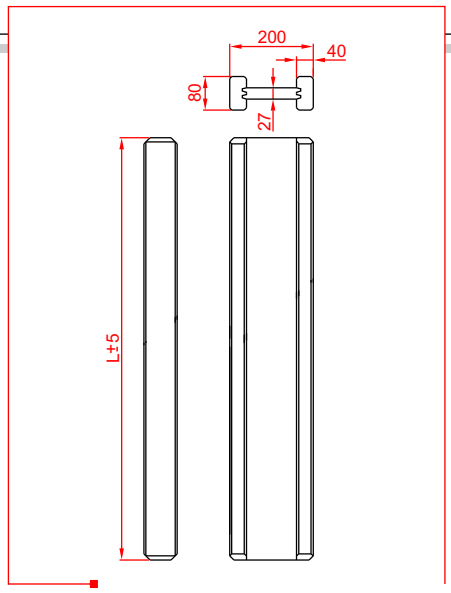

54. Formwork plywood

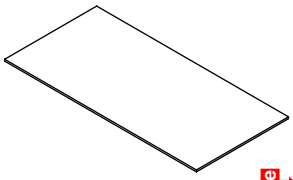

Plywood is 21 mm thick, smooth finish on both sides, water resistant, protected with resin coating.

Index	Dimensions (mm)	Weight (kg)
a0998155	21x1550x1550	35.7
a0998250	21x1250x2500	46.5
a0998300	21x1500x3000	61.2
a0999150	21x500x1500	11.1
a0999200	21x500x2000	14.7
a0999250	21x500x2500	13.3

okuwane

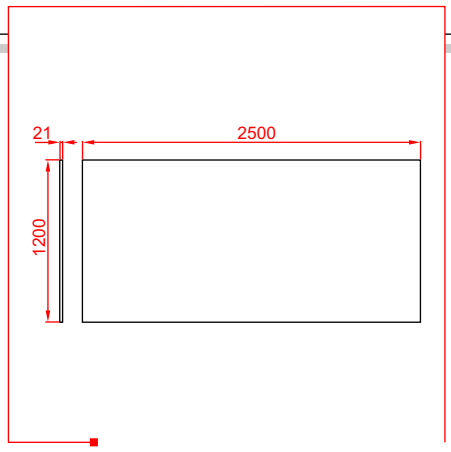

55. Cross head

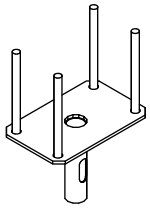

Provides the support for ceiling formwork. The fork tongs spacing allows the safe installation of one beam, while after turning the head by 90 degrees – two beams.

Index	Dimensions (cm)	Weight (kg)
a0020001	22x14	2.61

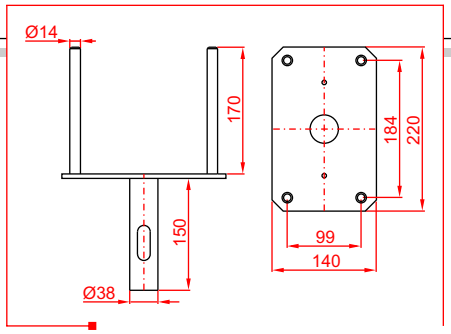

56. Intermediate head

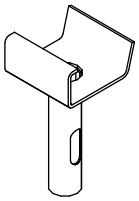

Serves as intermediate beam support. Allows set-up with required spacing of ceiling supports.

Index	Dimensions (cm)	Weight (kg)
a0020002	10x10.4	0.86

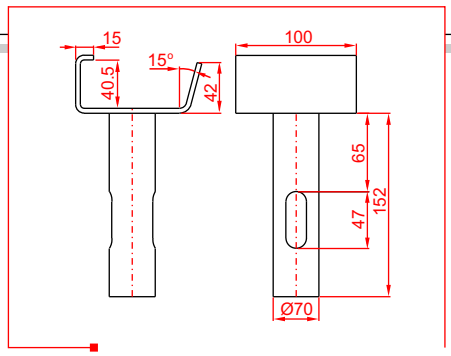

57. Beam clamp

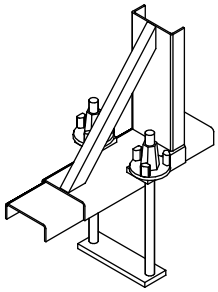

Allows precise boarding of binders, beams, lintels etc. Provides horizontal shift regulation, which allows simple and fast boarding setting along straight lines or according to the required shape.

Index	Dimensions (cm)	Weight (kg)
a0026000	40x53	5.97

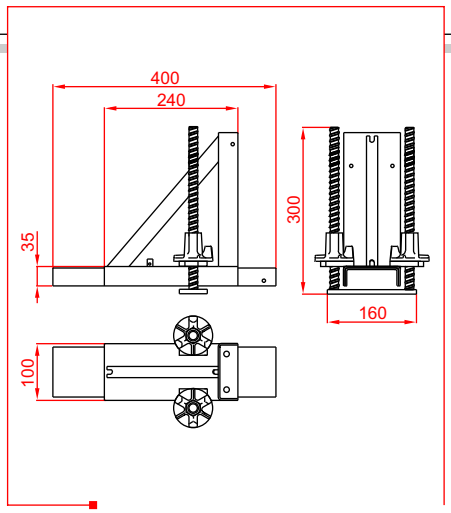

58. Rail post

All types of posts secure the work during boarding. Maximum post spacing is 2 m.

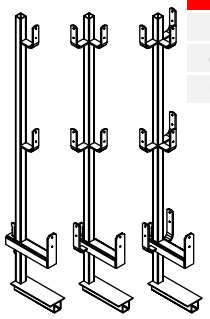

Name	Index	Weight (kg)
rail post	a0035130	6.98
corner rail post	a0036130	7.70
universal rail post	a0038130	8.43

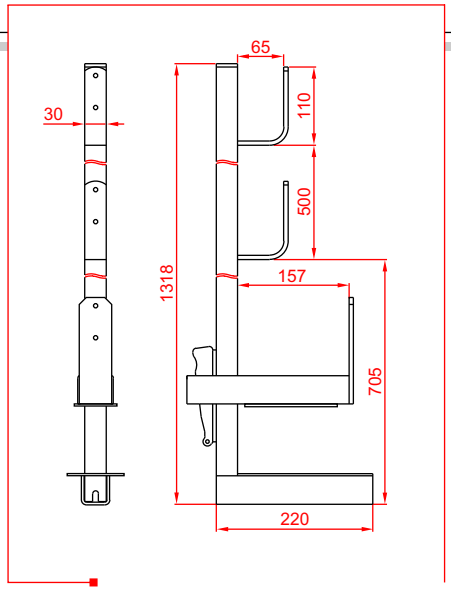

59. Top wall bracket

Ideal for setting up the formwork for far edges of the ceiling on existing walls or binders.

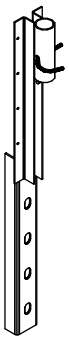

Index	Dimensions (cm)	Weight (kg)
a0030000	90	3.90

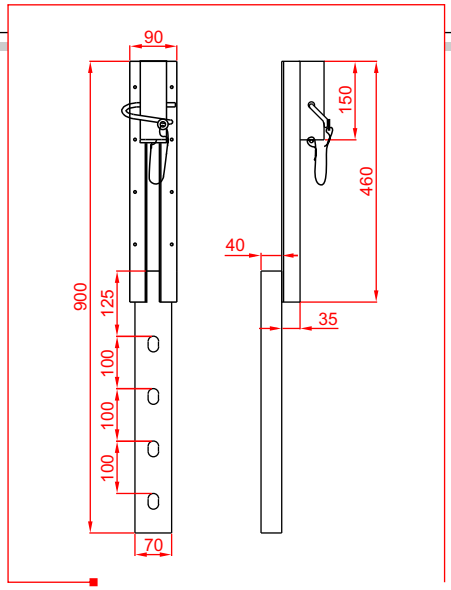

60. Aluminium panel

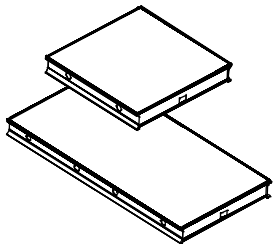

Shuttering board framing is made of aluminium and lined with water resistant plywood

Index	Dimensions (cm)	Weight (kg)
a0050945	90x45	8.22
a0050960	90x60	9.70
a0050975	90x75	11.2
a0050990	90x90	12.7
a0051845	180x45	15.2
a0051860	180x60	17.8
a0051875	180x75	20.4
a0051890	180x90	23.0
a0051898	180x180	54.4

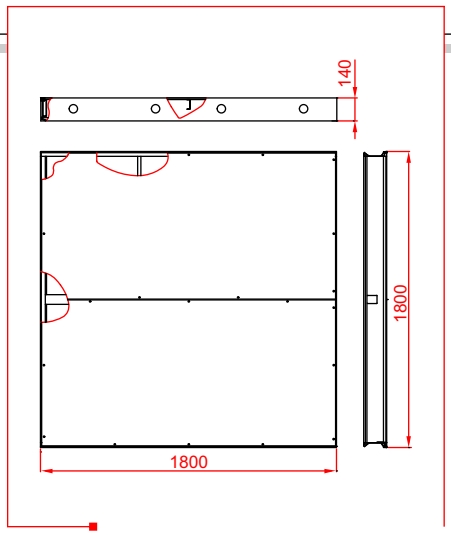

61. Adjustment aluminium panel

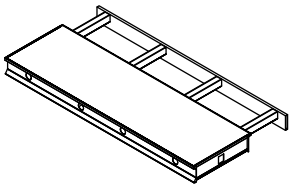

The width of the board can be adjusted in range of 55 up to 90 cm.

Index	Dimensions (cm)	Weight (kg)
a0060055	55-90x180	30.5

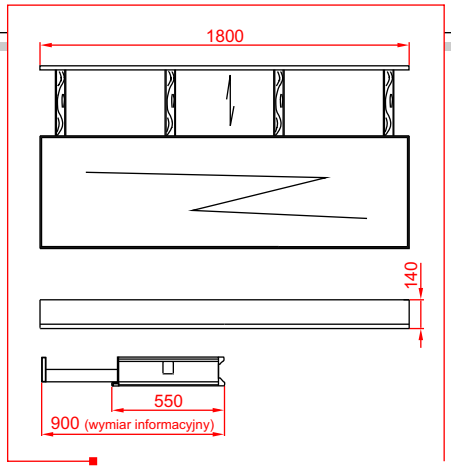

62. Transverse beam

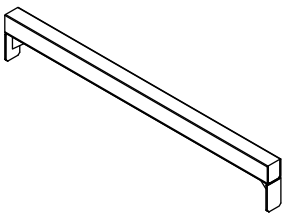

Installed in longitudinal position against compensating beams

Index	Weight (kg)
a0081090	2.70

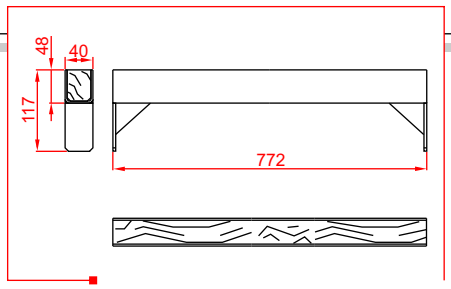

63. Adjustment beam

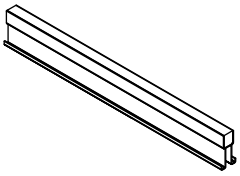

Steel beam with wooden slat attached. Placed where boards need to be supplemented.

Index	Dimensions (cm)	Weight (kg)
a0080090	90	5.75
a0080180	180	11.4

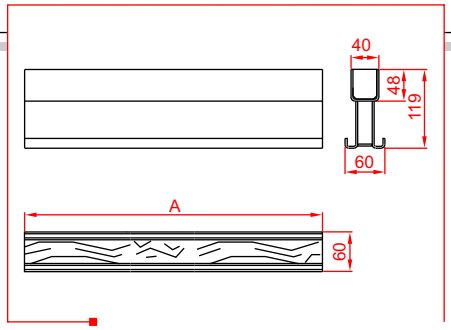

64. Steel supporting head

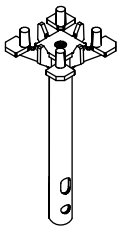

Placed inside the support, serves as a support for aluminium ceiling panels

Index	Weight (kg)
a0070000	2.28

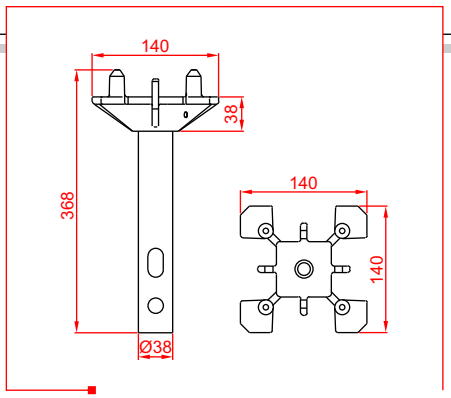

65. Corner supporting head

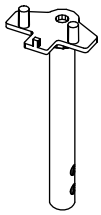

Allows very tight connection of shuttering boards with walls.

Index	Weight (kg)
a0070002	1.96

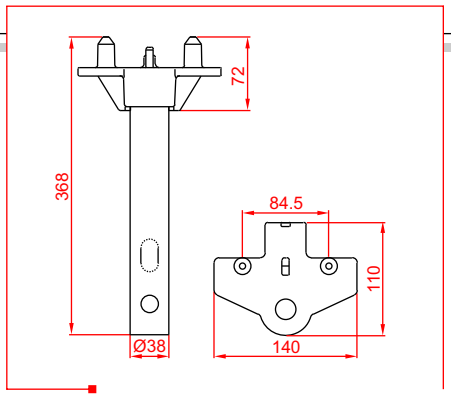

66. Bearing for railing

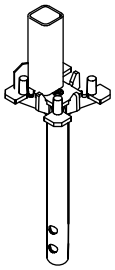

Serves for attaching working platform's posts.

Index	Weight (kg)
a0072000	3.24

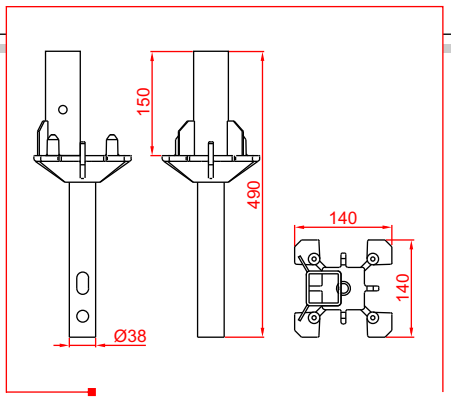

67. Head support shoe

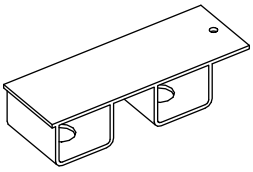

Placed on heads. Serves for placing square timbers supplementing the formwork.

Index	Weight (kg)
a0075000	0.59

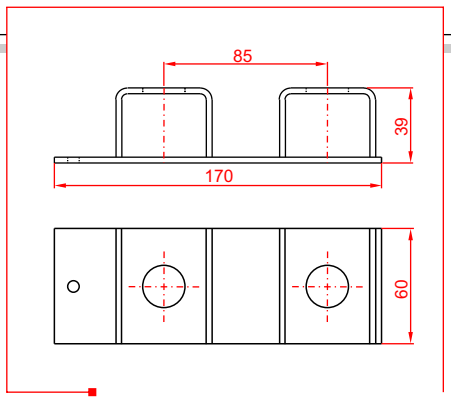

68. Security for the toeboard

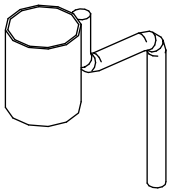

Placed on working platform's post. Holds toeboard in place.

Index	Weight (kg)
a0078000	0.40

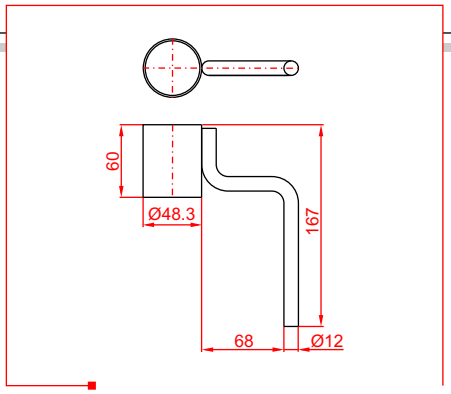

69. Base frame

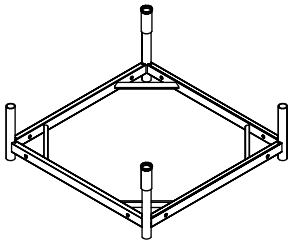

Installed on top and bottom of the tower. Stiffens the structure vertically.

Index	Weight (kg)
a0040100	17.4

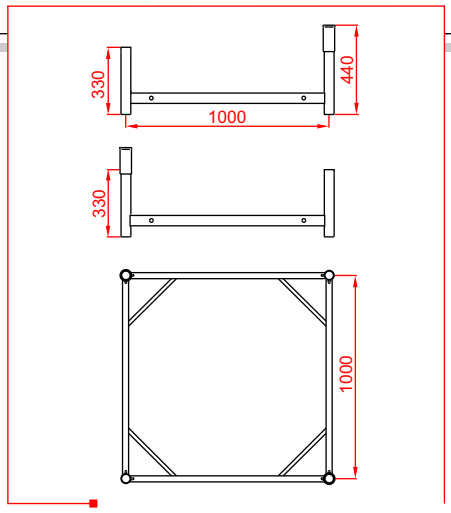

70. Basic frame

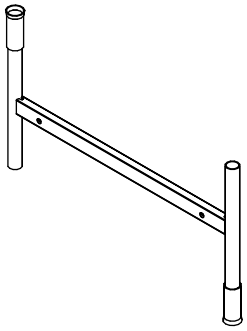

Stiffens the structure horizontally. Four basic frames are mounted at the height of 1 m.

Index	Weight (kg)
a0041050	7.70

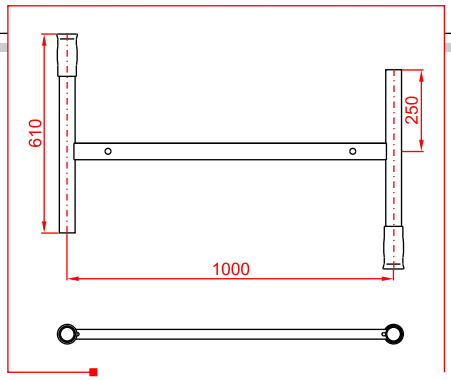

71. Vertical bracing

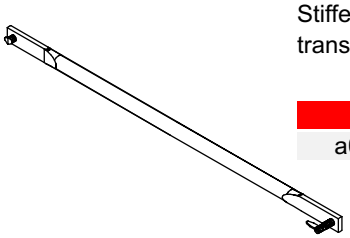

Stiffens tower sides and connects frames during crane transport.

Index	Dimensions (cm)	Weight (kg)
a0042125	125	2,50

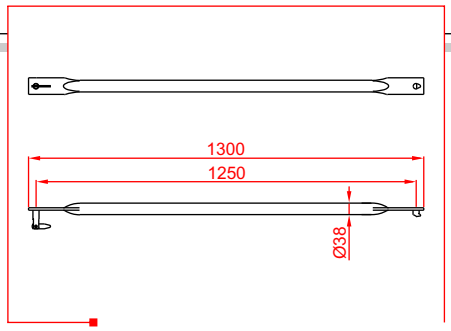

72. Adjusted footing

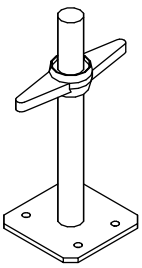

Serves for compensation of ground faults. Adjustment range – 400 mm.

Index	Weight (kg)
e511206	4.30

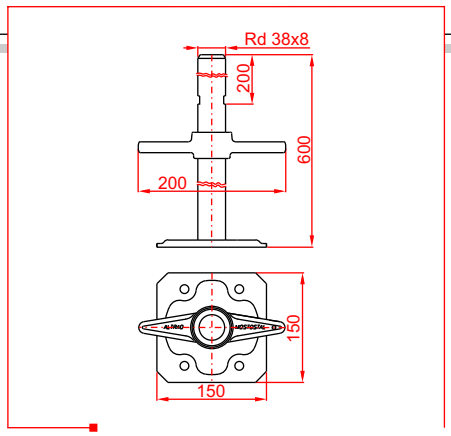

73. Threaded cross head

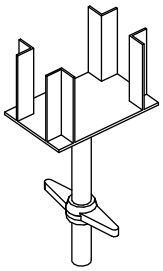

Provides support for ceiling formwork. Adjustment range – 350 mm.

Index	Weight (kg)
e642210	8.14

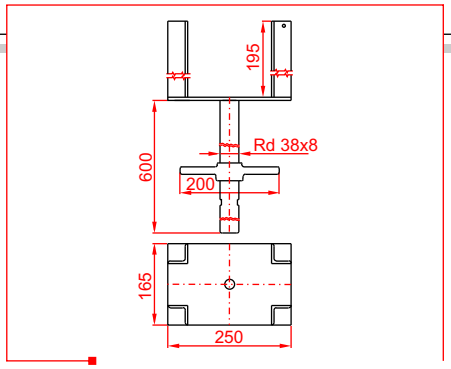

74. Transport security

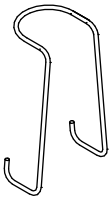

Secures foot and head from slipping out of frames

Index	Weight (kg)
a0040000	0.10

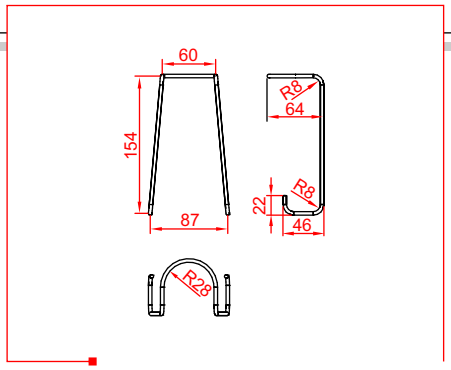

75. Normal coupling

Connects pipes Ø=48.3 at right angle.

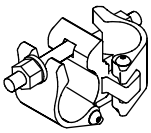

Index	Weight (kg)
e581119	0.80

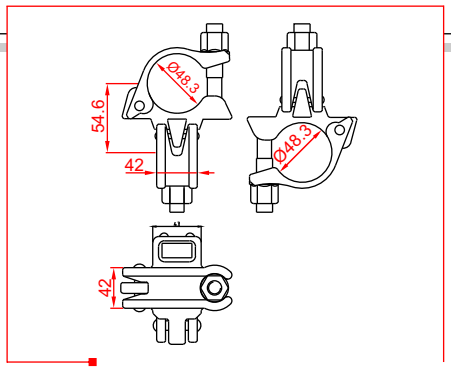

76. Rotary coupling

Connects pipes Ø=48.3 pat any angle.

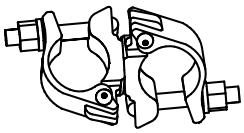

Index	Weight (kg)
e581319	1.20

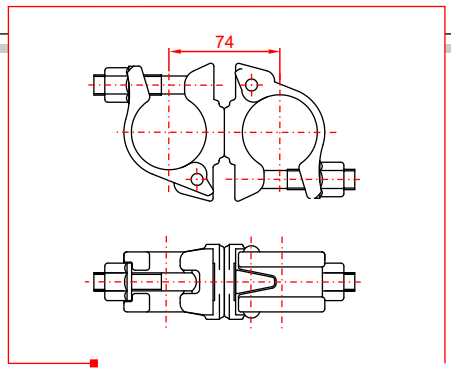

77. Universal pipe

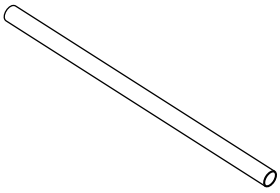

Used for stiffening the towers (L = 1 ÷ 6 mb).

Index	Dimensions (cm)	Weight (kg)
e440510	100	3.56
e440520	200	7.12
e450530	300	10.7
e440540	400	14.2
e440550	500	17.8
e440560	600	21.4

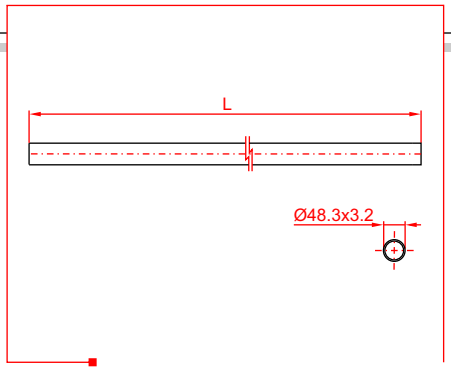

78. Module pallet

Ideal for economical storage and transportation of formwork elements. Adapted for forklift and crane transportation.

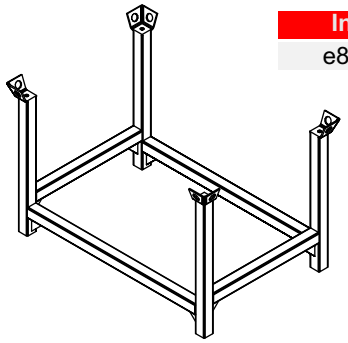

Index	Dimensions (cm)	Weight (kg)
e822800	128x88	40.2

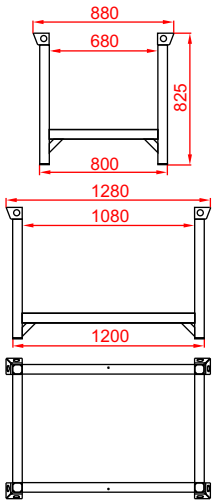

79. Module basket

As the set with module pallet. Used for storage of small elements. May be used as an additional or supplemental element of module pallet.

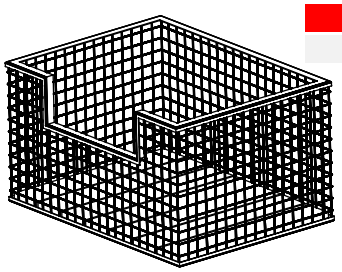

Index	Dimensions (cm)	Weight (kg)
e822900	108x68	30.4

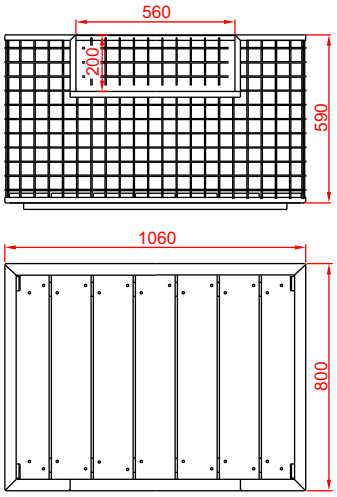

80. Basket pallet

Ideal for transportation of formwork elements. Adapted for forklift and crane transportation.

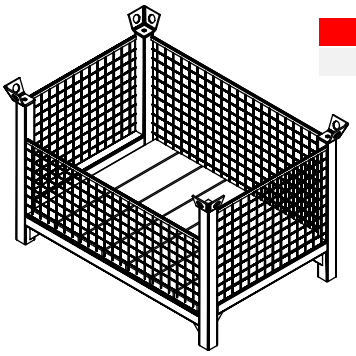

Index	Dimensions (cm)	Weight (kg)
e822808	128x88	69.7

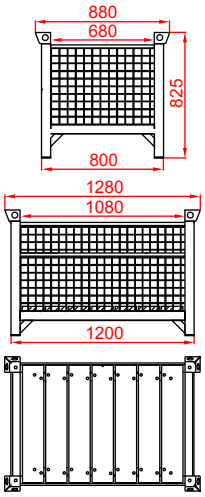

81. Anti-adhesive liquid

Oil based anti-adhesive liquid for lubrication of shuttering boards' surfaces on the inside of the formwork. Protects against concrete's sticking to formwork.

Index	Weight (kg)
a2599001	30.0

ALTRAD-Mostostal boarding system – Media-Markt construction site in Warsaw

ALTRAD-Mostostal offers two types of supporting towers: S10 tower and tower based on ROTAX system.

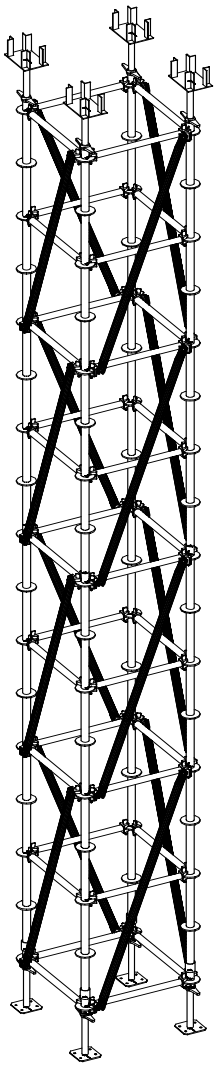

TWO SYSTEMS, MULTIPLE POSSIBILITIES

1. S10 supporting towers' structure consists of steel frames with a support distance of 1.0 x 1.0 m and height stepped every 0.5 m.

2. Supporting towers based on ROTAX scaffoldings can be assembled using steel elements with support distance starting from 0.73 x 0.73 m (other distances can be obtained depending on system transoms' length) and height stepped every 0.5m.

3. One of S10 towers' advantages over ROTAX based towers, is their faster assembly.

4. It is possible to connect multiple towers when constructing ROTAX towers. In case of S10 towers, the connection of multiple towers requires the use of universal pipes and cross couplings.

5. ROTAX tower's structure allows assembly of steel brackets (0.36 m; 0.73 m; 1.09 m), which are used as working platforms. The connection is realized with the use of stiffeners.

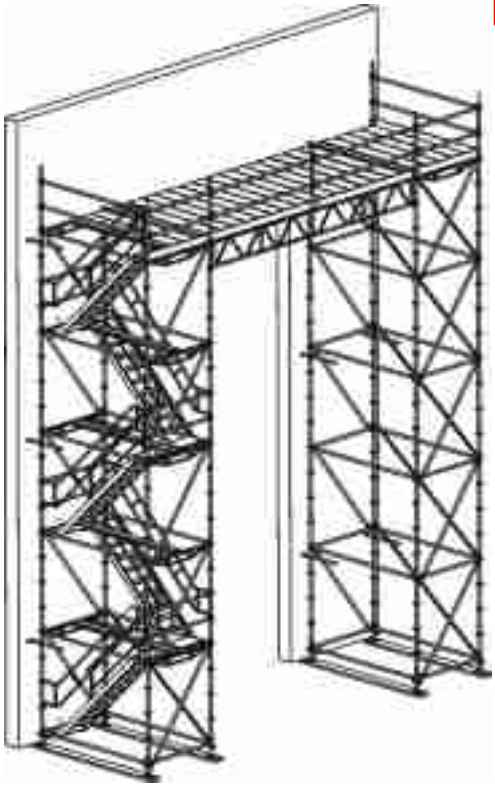

Inspection platform – application example of ROTAX tower and a staircase

ALTRAD-Mostostal additional elements of the offer consist of incredibly economical staircases, which improve building construction and finishing works.

ROTAX staircases

Staircases based on ROTAX and Mostostal PLUS scaffoldings. Used for communication between building's levels. Realized as single- or multi-speed.

Staircases can act as communication plumb-lines attached to the scaffolding's facade or as independent structures properly anchored to existing objects.

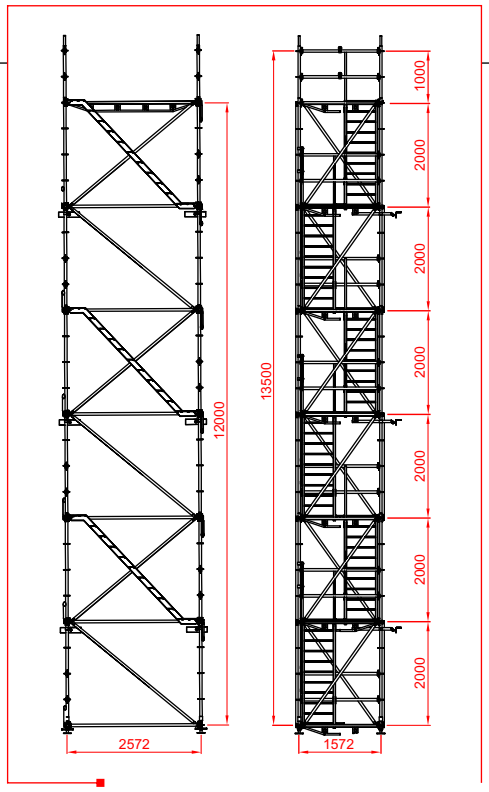

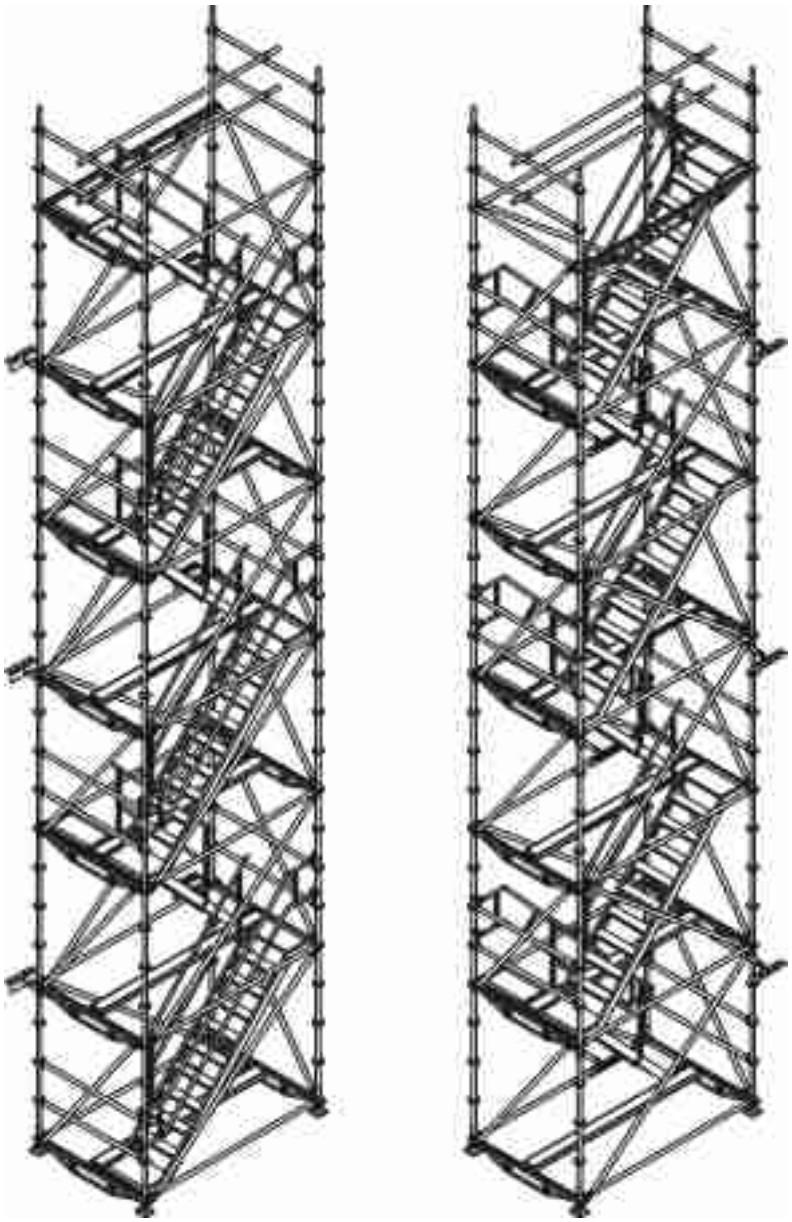

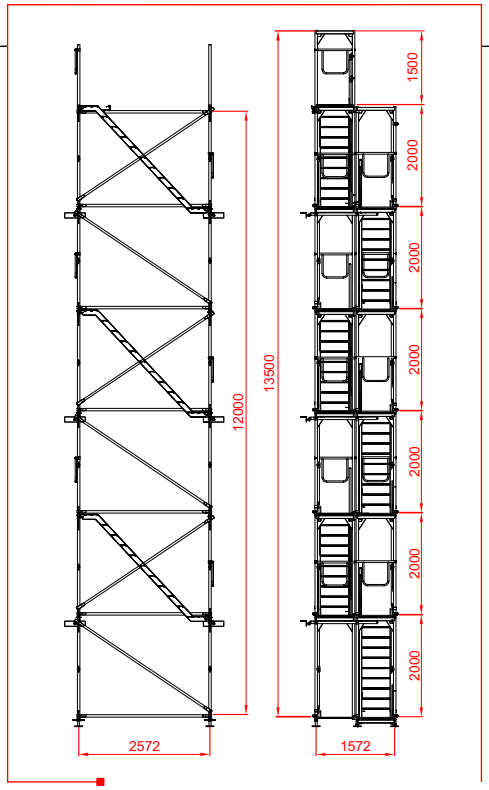

Choice of a proper scaffolding type for staircases is crucial in case of anchoring the staircases to the facade of existing scaffolding.

Both staircase types have common elements: stairs, internal stair-rails.

Typically, external staircase is mounted in the bay measuring 3.07 m or 2.57 m.

Presented structures are used in cases where there is a need to gain access to a particular building level, where formwork assembly or concrete filling is conducted.

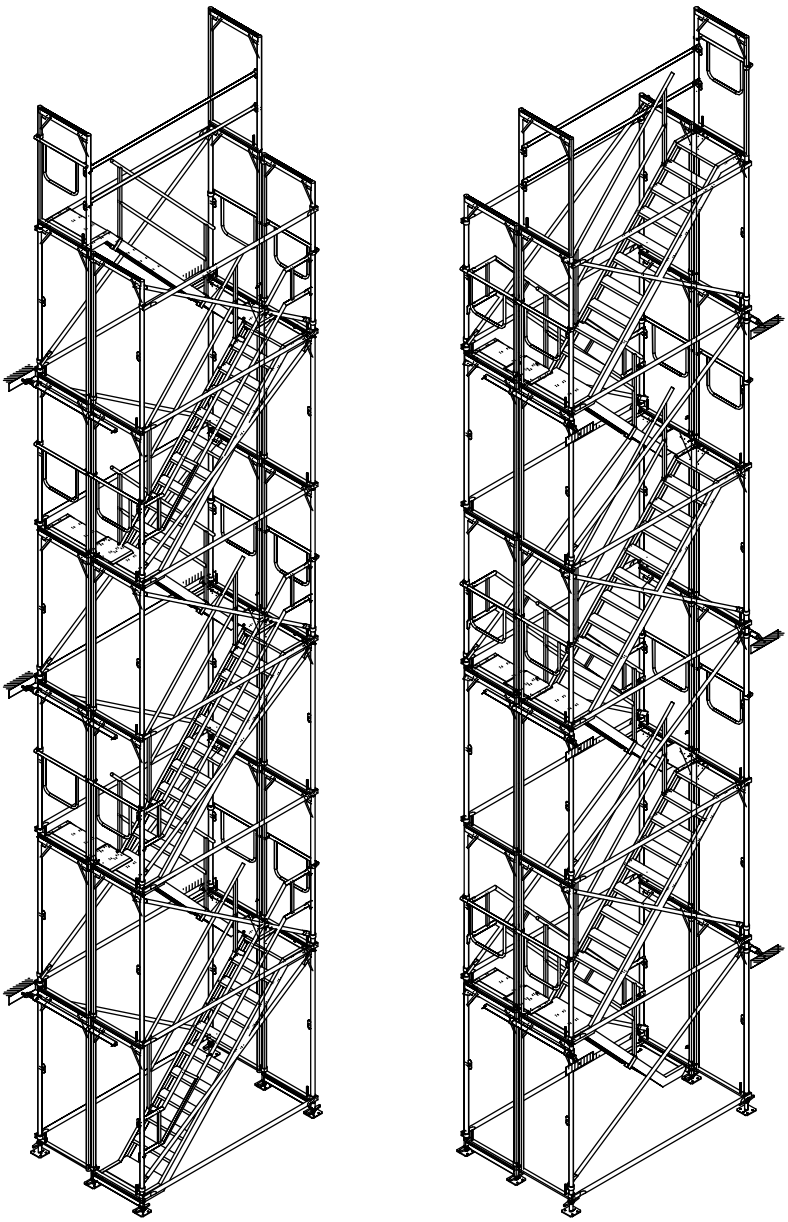

ALTRAD-Mostostal Spółka z o.o.
tel.: 0 801 ALTRAD (0 801 2 5 8 7 2 3)
tel.: +48 25 644 82 93, fax: +48 25 644 62 62
ul. Starzyńskiego 1, 08-110 Siedlce

www.altrad-mostostal.pl